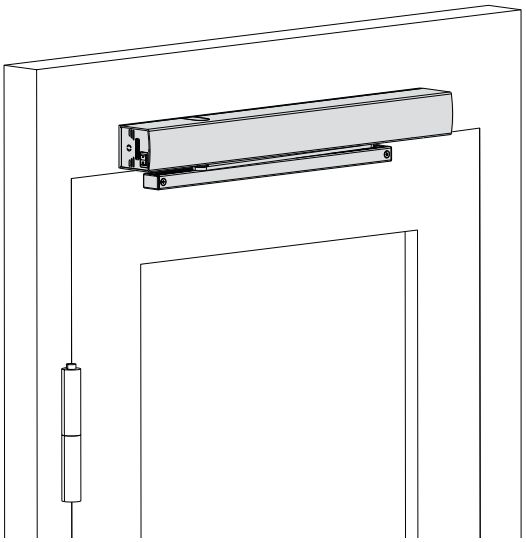

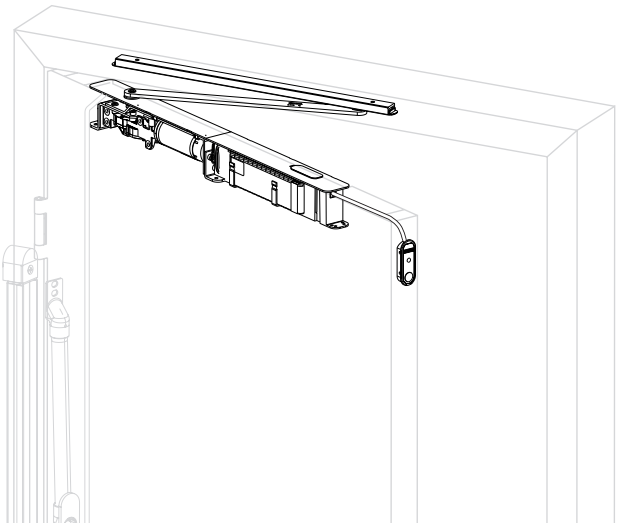

ECturn
ECturn Inside

EN Wiring diagram

196505-00

GEZE

Contents

Symbols and illustrations 4

Validity 4

Product liability 4

1 Notes 5
1.1 Important safety instructions 5
1.2 Installation information 5
1.3 Safety-conscious working 5
1.4 Inspection of installed system 5
1.5 Disposal of the door system 6

2 Abbreviations 6

3 Electrical data 7

4 Terminals 8
4.1 ECturn terminals 8
4.2 ECturn Inside terminals 9

5 Safety sensor close and open 10
5.1 Safety sensor GC 338 10
5.2 Safety sensor GC 342 12
5.3 Safety sensor GC 334 13
5.4 Safety sensor GC 335 14

6 Mechanical contact 16
6.1 Key switch 16

7 Contact sensor 17
7.1 GC 302 R radar movement detector 17
7.2 Push buttons (potential-free contact) 17

8 Radio control 18
8.1 Radio channels 18

9 Push And Go 19

10 Push to Close 19

11 Configurable input 20
11.1 Sabotage 20
11.2 Switch function 20
11.3 NA mode of operation 20
11.4 Stop 21
11.5 Bolt message 21
11.6 Contact sensor K 21
11.7 Mechanical programme switch (MPS) 21
11.8 Contact sensor K/DO mode of operation 22
11.9 WC control 22

12 Programmable output 22
12.1 Gong 22
12.2 Fault 22
12.3 Electric strike and motor lock 22
12.4 Further functions 23

12.5 WC control ... 23

13 WC control ... 23

14 Mode of operation ... 25
14.1 Mode of operation button ... 25
14.2 Mechanical programme switch ... 25
14.3 Keypad programme switch ... 26
14.4 Display programme switch ... 27

15 Mains connection ... 27
15.1 Mains connection ECturn ... 27
15.2 Mains connection for ECturn Inside ... 28

16 Motor ... 29

17 Rechargeable battery ... 30

18 Control unit ... 31
18.1 ECturn control unit ... 31
18.2 ECturn Inside control unit ... 32

19 Low-energy mode and automatic mode ... 32
19.1 Low energy mode ... 32
19.2 Automatic mode ... 33

20 Commissioning and service ... 34
20.1 Display programme switch ... 34
20.2 Service buttons S1 and S2 ... 34
20.3 Pre-conditions for commissioning ... 34
20.4 Commissioning the drive ... 35
20.5 Commissioning the drive with GC 338 ... 36

21 Parameter menu ... 38
21.1 Value table for service LEDs and display programme switch ... 40

22 Error messages ... 41

Symbols and illustrations

Warning notices

In these instructions, warning notices are used to warn against material damage and injuries.

- ▶ Always read and observe these warning notices.
- ▶ Observe all measures marked with the warning symbol and warning word.

Warning symbol	Warning word	Meaning
	**DANGER**	Danger to persons. Non-compliance will result in death or serious injuries.
	**WARNING**	Danger to persons. Non-compliance can result in death or serious injuries.
	**CAUTION**	Danger to persons. Non-compliance can result in minor injuries.

Further symbols and illustrations

Important information and technical notes are highlighted to explain correct operation.

Symbol	Meaning
	means “important information”; Information on avoiding material damage, understanding a concept or optimising the operation sequences
	means “additional Information”
▶	Symbol for an action: This means you have to do something. ▶ If there are several actions to be taken, keep to the given order.

Symbol	Meaning
EN 16005	compliant with EN 16005
EN 16005	not compliant with EN 16005
	Do not dispose of the device with household waste, hand it in to a collection point

Validity

Valid for devices from

- Hardware:
  - ECturn, DCU700, Rev C0
  - ECturn Inside, DCU703, Rev A0
- Software: DCU7, V 1.5

Product liability

In accordance with the liability of the manufacturer for his products as defined in the German “Product Liability Act”, the information contained in this brochure (product information and proper use, misuse, product performance, product maintenance, obligations to provide information and instructions) is to be observed.
Failure to comply releases the manufacturer from his statutory liability.

1 Notes

1.1 Important safety instructions

To ensure personal safety, it is important to follow these safety instructions.

- ▶ Keep these instructions.
- ▫ Only specialists who are authorised by GEZE are permitted to carry out installation, commissioning and maintenance.
- ▫ Unauthorised modifications to the system release GEZE from liability for any resulting damages.
- ▫ GEZE does not accept any warranty for combinations with third-party products. Only original GEZE parts may be used for repair and maintenance work as well.
- ▫ Attach safety stickers to glass door leaves, mat no. 081476.
- ▶ In accordance with Machinery Directive 2006/42/EC, a safety analysis is to be performed and the door system marked in compliance with CE Marking Directive 93/68/EEC before the door system is commissioned.
- ▫ Observe the latest versions of guidelines, standards and country-specific regulations, in particular:
  - ▫ ASR A1.7 “Guidelines for doors and gates”
  - ▫ EN 16005 “Power operated pedestrian doorsets - Safety in use - Requirements and test methods”
  - ▫ DIN VDE 100-600 “Low-voltage electrical installations - Part 6 Verification”
  - ▫ DIN EN 60335-2-103 “Household and similar electrical appliances - Safety; Particular requirements for drives for gates, doors and windows”
  - ▫ Accident-prevention regulations, especially BGV A1 (VBG1) “General regulations”
  - ▫ BGV A3 (VBG4) “Electrical installations and equipment”

1.2 Installation information

- ▫ The drive is designed exclusively for use in dry rooms.
- ▶ Use only the cables specified on the cable plan provided. Cables must be shielded in compliance with the wiring diagram.
- ▶ Always use insulated wire-end ferrules for wire cores.
- ▶ Insulate wires that are not used.
- ▶ Secure loose, internal drive cables with cable ties.
- ▶ Observe the maximum permitted total power consumption required to supply the periphery.

1.3 Safety-conscious working

- ▶ Secure workplace against unauthorised entry.
- ▶ Watch the swivelling range of long system parts.
- ▶ Secure the drive/drive cover/coupling elements against falling.

⚠ **DANGER**
Danger of electric shock!

- ▶ Before working on the electrical system, disconnect the power supply (mains and rechargeable battery) and check that no voltage is present. When an Uninterruptible Power Supply (UPS) is used, the system will still be under voltage even when disconnected from the mains.

- ▫ Danger of injury with opened drive. Hair, clothing, cables, etc. can be drawn in by rotating parts!
- ▫ Danger of injury caused by unsecured crushing, impact, drawing-in or shearing spots.
- ▫ Danger of injury due to sharp edges on the drive.
- ▫ Danger of injury due to glass breakage. Always only use safety glass.
- ▫ Danger of injury when working at heights.

1.4 Inspection of installed system

- ▶ Measures for checking safety and prevention of crushing, impact, shearing or drawing-in spots.
- ▶ Check the function of the presence sensors and movement detectors.

1.5 Disposal of the door system

- The door system is made up of materials that should be sent for recycling. For this purpose, the individual components should be sorted corresponding to material type:
  - Aluminium (profiles, cover, deflection pulleys, sliding blocks, ...)
  - Iron (driver, screws, ...)
  - Plastic
  - Electronic parts (bolt, motor gear unit, control unit, transformer, sensors, ...)
  - Cables
- The parts can be disposed of at the local recycling depot or by a scrap recycling company.
- Rechargeable batteries contain pollutants and heavy metals. Do not dispose of these with household waste. Hand in rechargeable batteries to your local recycler, too.



Information regarding the German Battery Directive:
(Applicable in Germany and in all other member states of the European Union as well as in other European countries, together with the countries' own provisions for a separate waste battery collection system.)
In accordance with the German Battery Directive, we are obliged to inform you of the following in connection with the sale of batteries or rechargeable batteries respectively in connection with the delivery of devices containing batteries or rechargeable batteries: Rechargeable batteries and batteries must not be disposed of with household waste. Disposal with household waste is expressly forbidden according to the German Battery Directive. As the final consumer, you are bound by law to return waste batteries and rechargeable batteries. Please return waste batteries and rechargeable batteries to a communal collection point or retailer.
Following use, you may return any batteries or rechargeable batteries received from us by post. The address is: GEZE GmbH, Incoming Goods, Reinhold-Vöster-Str. 21-29, 71229 Leonberg/Germany.

2 Abbreviations

Wire colours

BN	brown	GN	green	OG	orange	TQ	turquoise
BK	black	GY	grey	PK	pink	VT	violet
BU	blue	YE	yellow	RD	red	WH	white

Connections, terminals and plugs

AC	Alternating current	K	Contact sensor	SIS	Safety sensor for monitoring closing
AKKU	Rechargeable battery	KB	Mechanical contact	TOE	Electric strike
AU	Automatic mode of operation	LED	Light emitting diode	TPS	Keypad programme switch
BS	Hinge side	MOTOR	Drive motor	TST	Signal for testing the safety sensors
BGS	Opposite hinge side	MPS	Mechanical programme switch	UPS	Uninterruptible Power Supply
DC	Direct current	NA	Night mode of operation	24V	Supply voltage for external devices
DCU	Door controller	NT	Power supply	24VKB	24 V for mechanical contact, rechargeable battery buffered
DO	Hold open mode of operation	OFF	Off mode of operation	24VSENS	Supply voltage for sensors; switched off in the mode of operation OFF
BUZZER	Buzzer	PA	Configurable output	24VTOE	24 V for electric strike
DPS	Display programme switch	PE	Configurable input		
FK	Radio channel	PROG	Programming connection		
GND	Ground	RS485	Serial interface for local communication		
IGM	Incremental encoder on motor	SHLD	Screen		
		SIO	Safety sensor for monitoring opening		

3 Electrical data

	ECturn	ECturn Inside
Mains voltage	110 V to 230 V ±10%	110 V to 230 V ±10%
Frequency	50 Hz to 60 Hz	50 Hz to 60 Hz
Protection rating	I	II
Capacity rating	75 W	92 W
Mains connection	Safety plug (plug type F, CEE7/4) or Fixed connection (installation cable or drip loop)	Fixed connection (installation cable or drip loop)
Primary fuse	4 AT, 5×20 mm	–
Secondary fuse (self-resetting)	0.75 AT, 5×20 mm	0.75 AT, 5×20 mm
Secondary voltage power supply	24 V DC	24 V DC
Control voltage for external components	24 V DC ±10%	24 V DC ±10%
max. output current Control voltage 24 V	600 mA	600 mA
Rechargeable battery	NiMH, 19.2 V, 650 mAh	NiMH, 19.2 V, 650 mAh
Temperature range	–15 … +50 °C	–15 … +50 °C
IP rating	IP20	IP20

4 Terminals

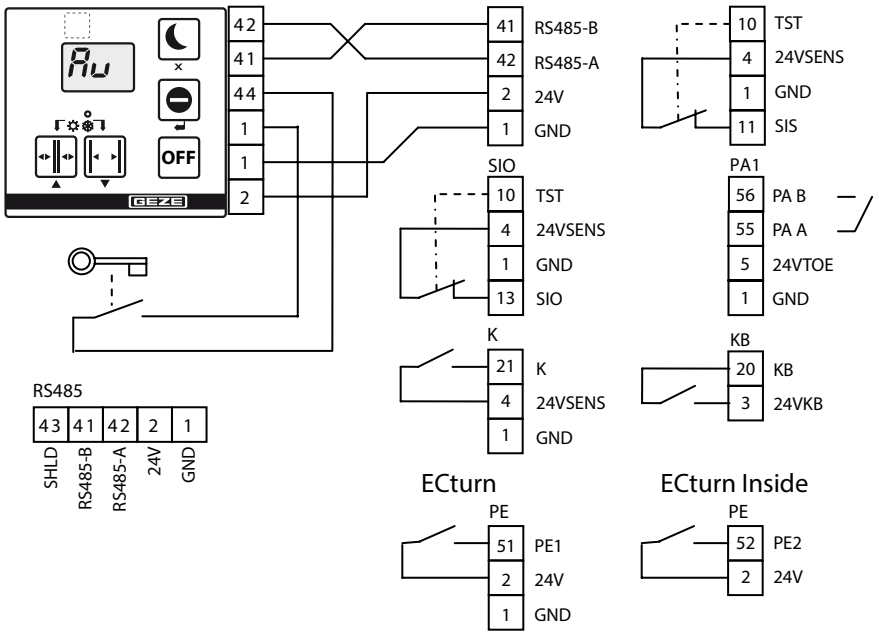

4.1 ECturn terminals

For the designations see chapter 18

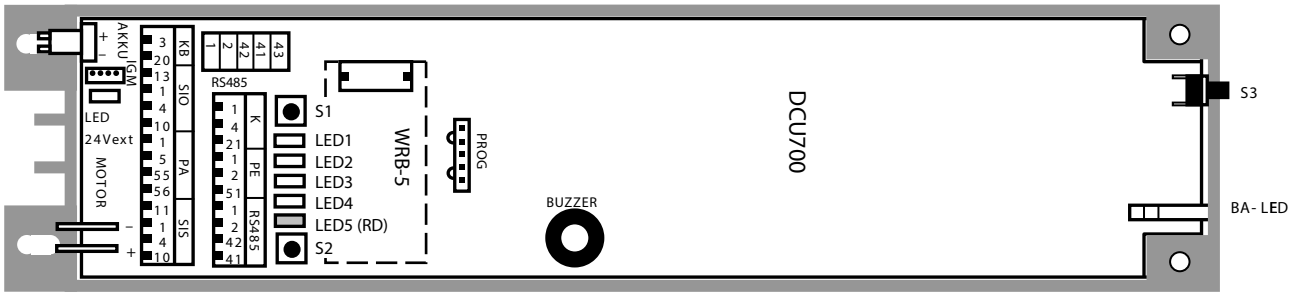

ECturn control unit - DCU700

4.2 ECturn Inside terminals

For the designations see chapter 18

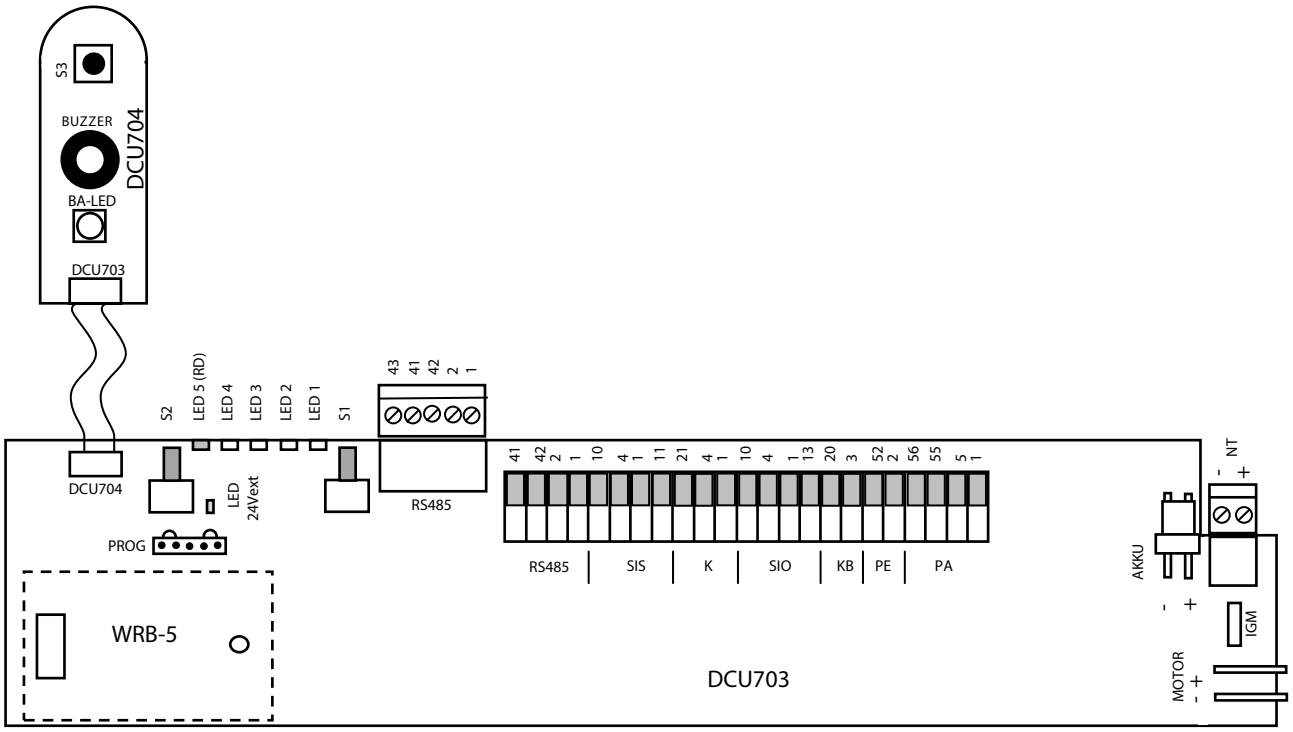

ECturn Inside control unit with operating unit - DCU703 with DCU704

5 Safety sensor close and open

- ▶ Install the sensor for monitoring closing on the door leaf, opposite hinge side.
  The door reverses if the SIS is activated during closing.
- ▶ Install the sensor for monitoring opening on the door leaf, hinge side.
  If the SIO is activated during opening, the door stops.
- ▫ At detection the output of the sensors is open (GND is applied to the SIS or SIO input).
- ▶ Check function and correct setting of the sensors during commissioning and service.
- ▫ The wall blanking range of the safety sensor SIO is set automatically during the teaching procedure.

5.1 Safety sensor GC 338

- ▫ GC 338 interface, mat. no. 143072
- ▫ GC 338 transmitter module, mat. no. 143060
- ▫ GC 338 receiver module, mat. no. 143071
- ▫ Accessories for setting the light curtain:
  - ▫ Spot finder, mat. no. 112321
- ▶ Follow installation instructions GC 338.

Setting the DIP switch at the interface

- ▶ Row 1 DIP 3 (signal) to ON (TST).

5.1.1 Monitoring closing and opening

EN 16005

- ▶ Set the parameters:
  - ▫ *51* (safety closing) to *01* for "SIS" or to *02* for "SIS and K".
  - ▫ *53* (safety opening) to *01* for "SIO".
  - ▫ *tE* (testing) to *01* for "testing with 24V".

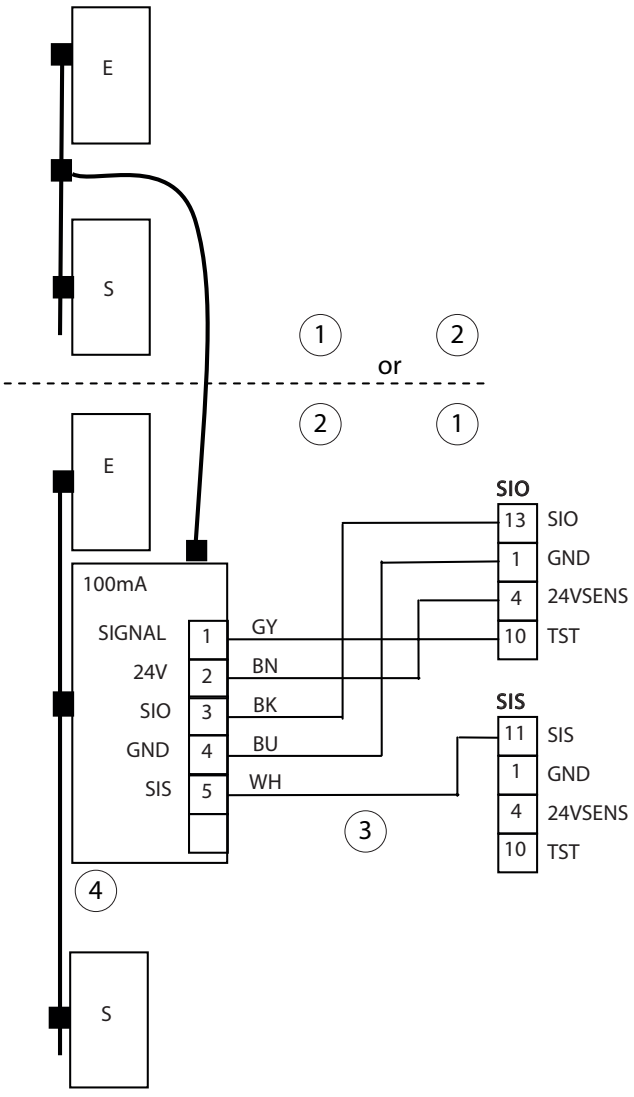

1 Opposite hinge side
2 Hinge side
3 Door transmission cable
4 GC 338 interface module

5.1.2 Monitoring opening

- Set the parameters:
  - S1 (safety closing) to 00 for "no SIS".
  - S3 (safety opening) to 01 for "SIO".
  - tE (testing) to 01 for "testing with 24V".

1 Opposite hinge side
2 Hinge side
3 Door transmission cable
4 GC 338 interface module

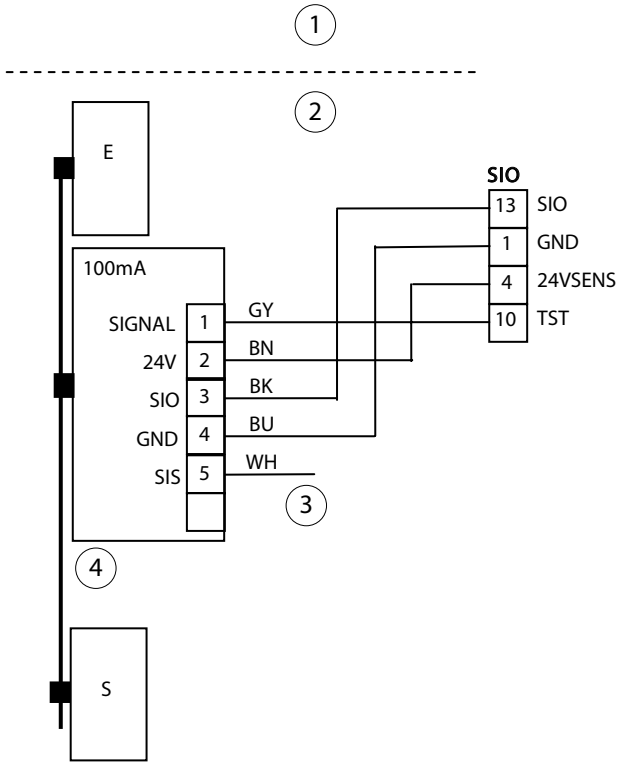

5.1.3 Monitoring closing

- Set the parameters:
  - S1 (safety closing) to 01 for "SIS" or to 02 for "SIS and K".
  - S3 (safety opening) to 00 for "no SIO".
  - tE (Testing) to 01 for "Testing with 24V".

1 Opposite hinge side
2 Hinge side
3 Door transmission cable
4 GC 338 interface module

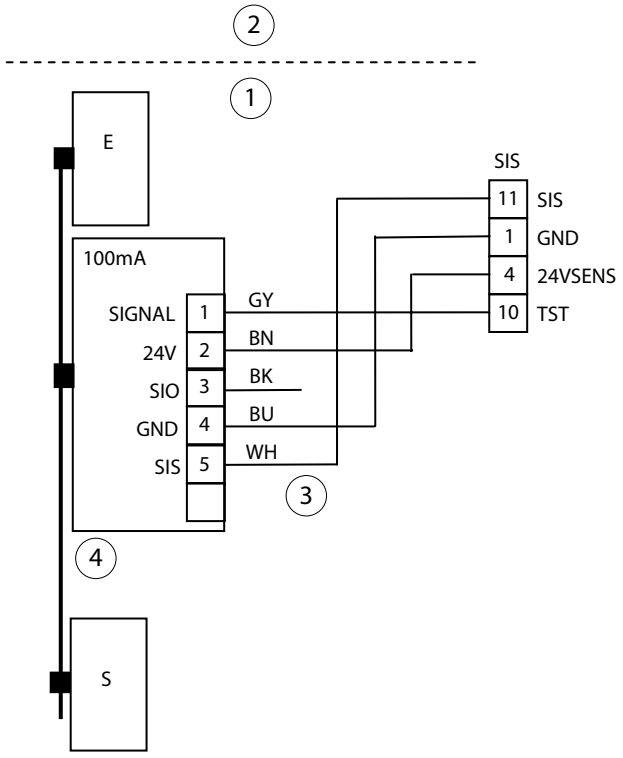

5.2 Safety sensor GC 342

- Accessories:
  - Remote control, mat. no. 100061
  - For further accessories see installation instructions GC 342
- ▶ Follow installation instructions GC 342.

Sensor position

- ▶ Mount safety sensors to the door leaf as specified in the GC 342 installation instructions.

GC 342 settings

- See installation instructions GC 342
- GEZE recommends using the optional remote control to change the sensor parameters.

5.2.1 Monitoring closing and opening

EN 16005

- ▶ Set the parameters:
  - S1 (safety closing) to 01 for "SIS" or to 02 for "SIS and K".
  - S3 (safety opening) to 01 for "SIO".
  - tE (testing) to 02 for "testing with GND".

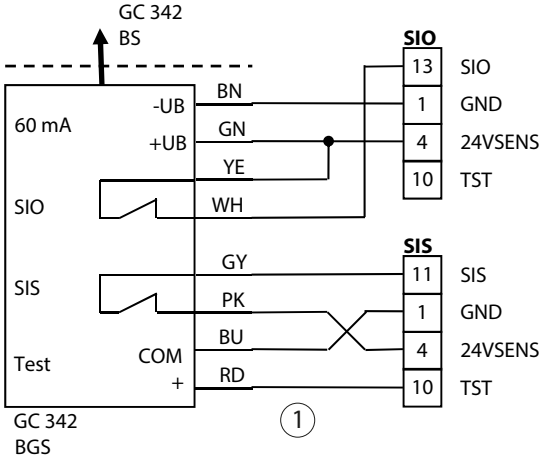

1 Door transmission cable

5.2.2 Monitoring opening

- ▶ Set the parameters:
  - S1 (safety closing) to 00 for "no SIS".
  - S3 (safety opening) to 01 for "SIO".
  - tE (testing) to 02 for "testing with GND".

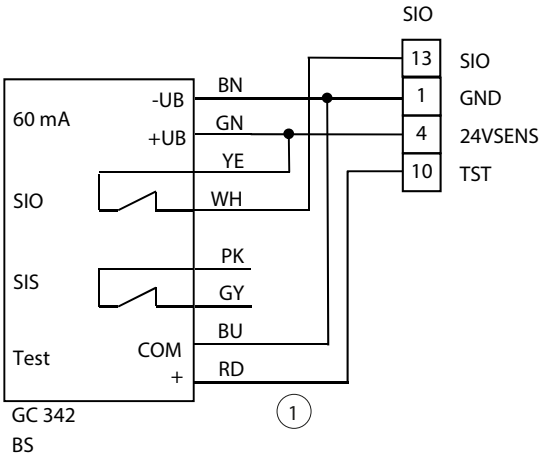

1 Door transmission cable

5.2.3 Monitoring closing

- ▶ Set the parameters:
  - ▫ *S1* (safety closing) to *01* for "SIS" or to *02* for "SIS and K".
  - ▫ *S3* (safety opening) to *00* for "no SIO".
  - ▫ *tE* (testing) to *02* for "testing with GND".

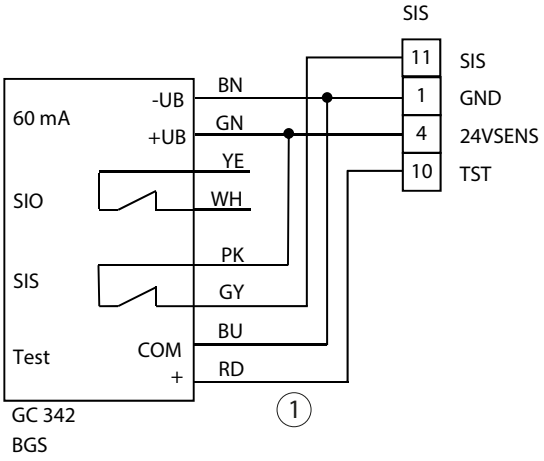

1 Door transmission cable

5.3 Safety sensor GC 334

- ▫ GC 334 module, mat. no. 126410
- ▫ Accessories:
  - ▫ GC 334 interface, mat. no. 128306
  - ▫ Spot finder, mat. no. 112321
- ▫ max. 6 modules in series
- ▶ Follow the installation instructions.

5.3.1 Monitoring closing and opening

EN 16005

- ▶ Set the parameters:
  - ▫ *S1* (safety closing) to *01* for "SIS" or to *02* for "SIS and K".
  - ▫ *S3* (safety opening) to *01* for "SIO".
  - ▫ *tE* (testing) to *02* for "testing with GND".
- ▶ Configure GC 334 modules:
  - ▫ Hinge side: DIP1 = ON
  - ▫ Opposite hinge side: DIP1 = OFF

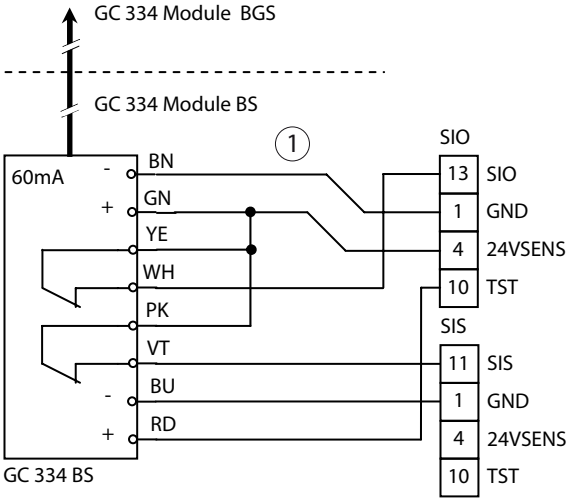

1 Door transmission cable

5.3.2 Monitoring opening

- ▶ Set the parameters:
  - ▫ S1 (safety closing) to 00 for "no SIS".
  - ▫ S3 (safety opening) to 01 for "SIO".
  - ▫ tE (testing) to 02 for "testing with GND".
- ▶ Configure GC 334 modules:
  DIP1 = ON

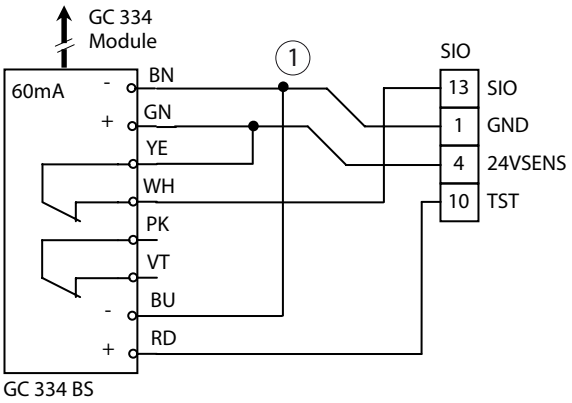

1 Door transmission cable

5.3.3 Monitoring closing

- ▶ Set the parameters:
- ▫ S1 (safety closing) to 01 for "SIS" or to 02 for "SIS and K".
- ▫ S3 (safety opening) to 00 for "no SIO".
- ▫ tE (testing) to 02 for "testing with GND".
- ▶ Configure GC 334 modules:
  DIP1 = OFF

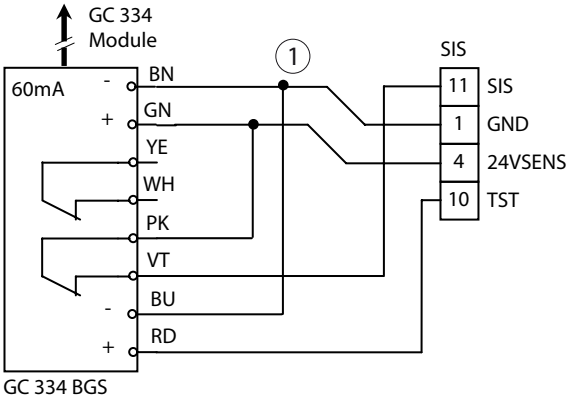

1 Door transmission cable

5.4 Safety sensor GC 335

- ▫ GC 335 master module, mat. no. 128074
  GC 335 extension kit (slave module with accessories), mat. no. 128072
- ▫ Accessories:
  - ▫ GC 332 adapter, mat. no. 124035
  - ▫ Spot finder, mat. no. 112321
- ▶ Use the reference body, mat no. 120190, to set the detection area.
- ▶ Always install the master module near the hinge, connection with drive control takes place at the master module.
- ▶ Connect max. 7 slave modules to one master module.
- ▶ Open the configuration bridge at the last slave module or at the master module (if no slave modules connected).
- ▶ Follow installation instructions GC 335.

5.4.1 Monitoring closing and opening

EN 16005

- Set the parameters:
  - S1 (safety closing) to 01 for "SIS" or to 02 for "SIS and K".
  - S3 (safety opening) to 01 for "SIO".
  - tE (testing) to 01 for "testing with 24V".

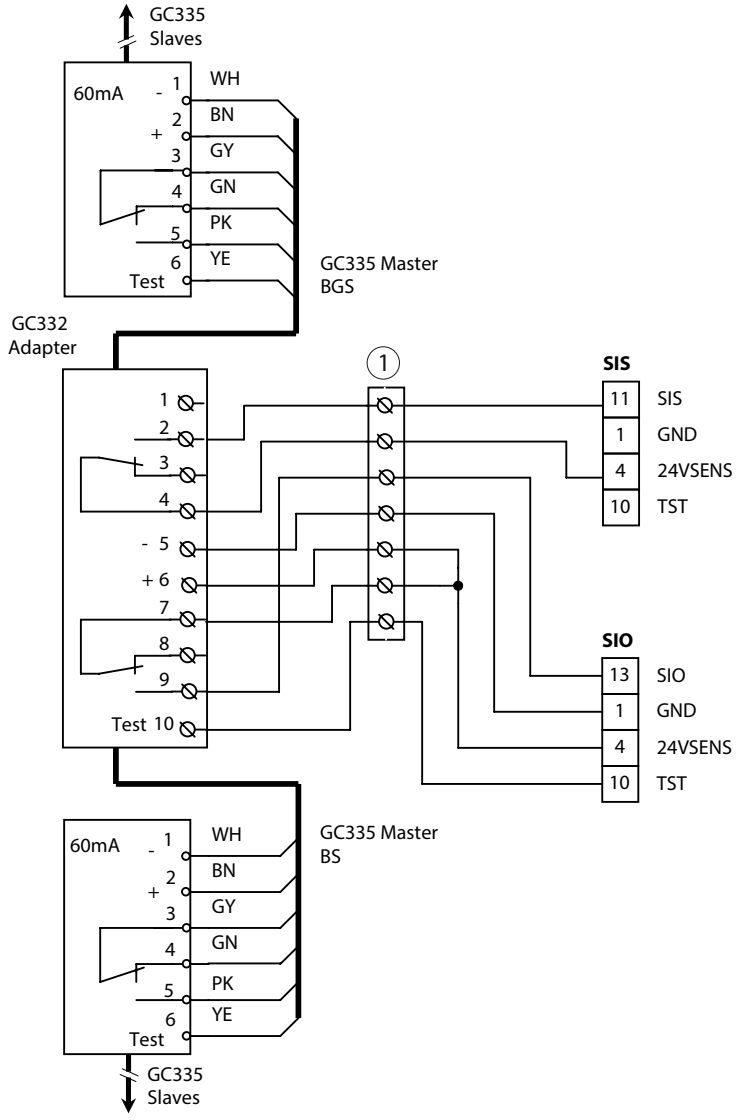

1 Door transmission cable

5.4.2 Monitoring opening

- ▶ Set the parameters:
  - 51 (safety closing) to 00 for "no SIS".
  - 53 (safety opening) to 01 for "SIO".
  - tE (testing) to 01 for "testing with 24V".

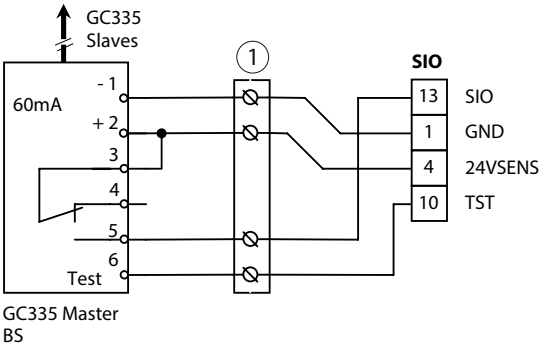

1 Door transmission cable

5.4.3 Monitoring closing

- ▶ Set the parameters:
  - 51 (safety closing) to 01 for "SIS" or to 02 for "SIS and K".
  - 53 (safety opening) to 00 for "no SIO".
  - tE (testing) to 01 for "testing with 24V".

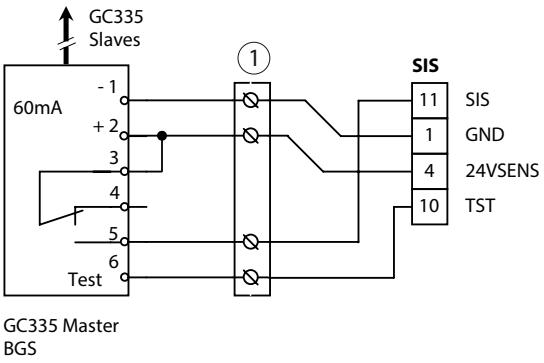

1 Door transmission cable

6 Mechanical contact

- The input KB is active in the AU and NA operating modes.
- When activated, the door opens.
- On activation the output of the mechanical contact is closed (24 V applied at the KB input).
- The mechanical contact function can also be activated via the WRB-5 receiving module, channel 2 (see 8.1.2, "Radio channel FK2").

- Do not operate the mechanical contact continuously since the drive will otherwise not be able to switch off automatically in the event of a supply voltage failure and the rechargeable battery of the drive will become discharged.
- Do not connect electrical loads to the terminal 24VKB because otherwise the rechargeable battery cannot be charged.

- The hold-open time when actuating via KB can be set separately.
  - Parameter oS (hold-open time KB).
- An activation delay can be set for contact sensor KB:
  - Parameter A1 (opening delay).

WARNING
Danger of injury due to impact and crushing!
If there is a rechargeable battery connected, the drive opens after activation KB even when mains voltage is switched off.
- ▶ Disconnect the rechargeable battery.

6.1 Key switch

- SCT key switch, single-pole, flush-mounted, AS500 without Euro profile half cylinder, mat. no. 117996
- Accessories:
  - Euro profile half cylinder, mat. no. 090176
  - Additional contact, mat. no. 024467

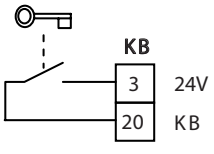

7 Contact sensor

- The K input is only active in the AU mode of operation.
- The contact sensor function can also be activated via the WRB-5 wireless module, channel 1 (see chapter 8.1.1, “Radio channel FK1”).
- When activated, the door opens.
- When activated, the output of the contact sensor is closed (24 V applied to the K input).
- The sensor for monitoring closing can also be used as a contact sensor (SIS and K function), see chapter 5, “Safety sensor close and open”.
- The contact sensors K and KB have the same opening delay.
- The hold-open time when actuating via K can be set separately.

▶ Set the parameters:
- *oH* (hold-open time).

7.1 GC 302 R radar movement detector

- GC 302 R black, mat. no. 124087
- GC 302 R according to RAL, mat. no. 124088 (remote control does not work with detector hood mounted, LED not visible)
- The GC 302 R is a directionally sensitive radar movement detector.
- Accessories:
  - Remote control, mat. no. 099575
  - Ceiling installation kit, mat. no. 115384
  - Rain cover, mat. no. 115339

▶ Observe installation instructions GC 302 R.

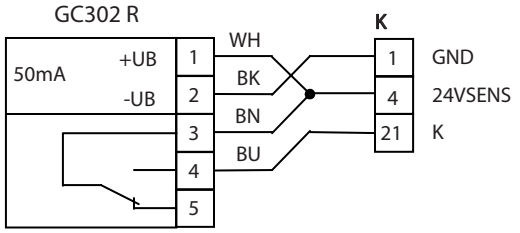

7.2 Push buttons (potential-free contact)

- GC 306 non-contact push button, mat. no. 163028
- GC 306 non-contact push button with hand pictogram, mat. no. 163029
- Plastic elbow switch, white, mat. no. 114078
- Plastic elbow switch, stainless steel, mat. no. 114077
- Stainless steel elbow switch, mat. no. 119898
- LS 990 stainless steel elbow switch, surface-mounted, mat. no. 128582
- LS 990 stainless steel elbow switch, flush-mounted, mat. no. 128583
- Accessories:
  - IP65 switch insert, mat. no. 114156
  - Additional contact, mat. no. 114157
  - WTM transmitting module, can be clipped in, mat. no. 131212
  - Back plate for plastic elbow switch,
    - white, mat. no. 131219
    - stainless steel, mat. no. 131220

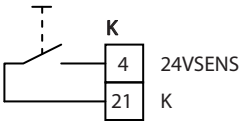

8 Radio control

- WRB-5 radio reception board, mat. no. 135170
- WTH-1 1-channel remote control, mat. no. 131209
- WTH-2 2-channel remote control, mat. no. 131210
- WTH-4 4-channel remote control, mat. no. 131211
- WTM transmitting module, mat. no. 131212

▶ Heed the installation and service instructions of the GEZE Automatic Wireless Programme.

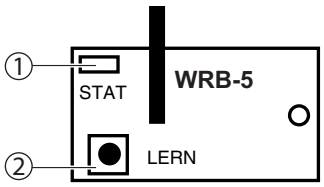

1 Status LED
2 Teach button

- The radio reception board WRB-5 can optionally be plugged onto the control unit.
- The receiving module has the two channels FK1 and FK2.
- The keys on the remote control can be taught separately using the teaching button on the receiving module.
- A maximum of 12 transmitters can be stored per channel in the memory of the receiver.

If more than 12 transmitters are taught, the 12th transmitter is always overwritten.

- Only one button each can be assigned per transmitter to one radio channel.
- If both radio channels are assigned to one transmitter button, only radio channel FK1 is connected when the button is pressed.
- When the receiver has received and decoded a valid transmission signal, it connects the corresponding output as long as the transmission signal is received, however at least for one second.

- Do not operate the buttons of the remote control WTH or the push button of the transmitting module WTM continuously since the drive will otherwise not be able to switch off automatically in the event of a power failure and the rechargeable battery of the drive will become discharged.
- If the teaching button (LERN) of the radio reception board is pressed for longer than 5 s, the taught transmitters of both channels are deleted.

8.1 Radio channels

8.1.1 Radio channel FK1

The function of the radio channel FK1 depends on how long the assigned button is pressed.
- If the button is pressed for longer than 5 s, the function is like that of the contact sensor input K.
- If the button is pressed for longer than 5 s in the AU mode of operation, the control unit changes to the DO mode of operation. After the button has been pressed again, the control unit changes back to the AU mode of operation.

Activate teach-in

▶ Press the teach button on the radio reception board for about 1 s.

The status LED flashes 1× per second.
The memory for the channel 1 is selected.

▶ Press the corresponding push button on the radio transmitter briefly within 30 seconds.

The status LED will light up briefly as confirmation. The radio transmitter has been taught successfully and teach-in is finished.
If further radio transmitters are to be taught to channel 1, the steps must be repeated.
For further instructions see the GEZE Automatic Wireless Programme installation and service instructions.

8.1.2 Radio channel FK2

The function of the radio channel FK2 is identical to that of activation input KB.

Activate teach-in

▶ Press the teach button on the radio reception board for about 1 s.

The status LED flashes 1× per second.

▶ Press the teach button again for about 1 s.

The status LED flashes 2× per second.
The memory for the channel 2 is selected.

▶ Press the corresponding push button on the radio transmitter briefly within 30 seconds.

The status LED will light up briefly as confirmation. The radio transmitter has been taught successfully and teach-in is finished.
If further radio transmitters are to be taught to channel 2, the steps must be repeated.
For further instructions see the GEZE Automatic Wireless Programme installation and service instructions.

9 Push And Go

WARNING
Danger of injury due to crushing and shearing!
During an activated Push And Go function door handles can form potential danger points.

- The Push And Go function allows activation of the drive without contact sensors being used.
- When the Push And Go function is set, the drive opens the door automatically as soon as the door leaf is moved manually out of the closing position.
- The opening angle for use of automatic opening can be adjusted.
- When a safety sensor open is connected, the SIO can block the opening of the door if the sensor detects an obstacle in the opening direction.

An activating angle that is set too small can result in undesired automatic opening of the door.

▶ Set the parameter Pu (Push And Go) to 00, for "no Push And Go" or to the required opening angle for the start of automatic opening.

10 Push to Close

WARNING
Danger of injury due to crushing and shearing!
Push To Close can lead to undesired automatic closing of the door on exterior doors or doors that can be moved unintentionally towards the closing position.

Depending on the setting, the Push To Close function allows the door to be set manually from the mode of operation DO to AU, or to interrupt an expiring hold-open time in AU or NA and to make the door close.
When the Push To Close function is set, the drive closes the completely open door if it is moved manually by approx. 10° towards the closing position.
When a safety sensor "close" is connected, this can block the closing of the door if the sensor detects an obstacle.

▶ Set the parameter Pc (Push To Close):
- 00 – no "Push To Close"
- 01 – "Push To Close" in AU or NA (cancel hold-open time, switch function)
- 02 – "Push To Close" in DO, drive changes to mode of operation AU
- 03 – "Push To Close" in AU, NA or DO (cancel hold-open time, switch function or change to mode of operation AU).

Setting values 02 and 03 cannot be used at the same time as a manual programme switch (MPS).

11 Configurable input

PE is a configurable input. The function can be set via the service menu (see chapter 21, “Parameter menu”).
ECturn: The signal is connected to input PE1 - terminal 51.
ECturn Inside: The signal is connected to input PE2 - terminal 52.

11.1 Sabotage

- The configurable PE input can be used as a sabotage input e.g. for monitoring a mechanical contact with sabotage contact.
- When the switch housing is closed, the sabotage contact is closed, 24 V is applied to the sabotage input.
- When the key switch housing is opened, the sabotage contact is opened, 0 V is applied to the sabotage input.
  - In this case activation via the mechanical contact is ignored.
  - Error 32 (Sabotage) is indicated.
  - If the PA output is configured as a fault output, the output contact is closed.
  - Activation via KB is only possible again after the mode of operation has been changed with closed sabotage contact.

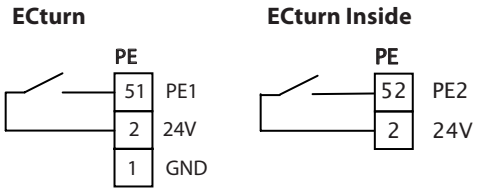

▶ Set the parameters:
  - Set *E1* or *E2* (configurable input) to *01* for “sabotage”.
  - If necessary, set *A1* (configurable output) to *02* for “fault”.

11.2 Switch function

- Upon activation, the output of the button is closed (24 V applied to the PE input).
- The first switch contact opens the door and the next closes the door. For the setting switch function with closing after the hold-open time, the door closes automatically after the hold-open time elapses if it was not closed via the push button beforehand.

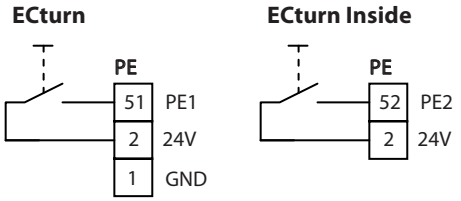

▶ Set the parameters:
  - Set *E1* or *E2* (configurable input) to *02* for “switch function” or to *03* for “switch function close after hold-open time”.

11.3 NA mode of operation

- The configurable PE input can be used as the input for NA mode of operation.
- When the night mode switch is activated, the contact is closed (24 V applied to the PE input).
- The door closes and changes to the NA mode of operation as soon as the switch is pressed.
- The door remains in the NA mode of operation as long as 24 V is applied to the PE output. It is not possible to change the mode of operation via a programme switch.

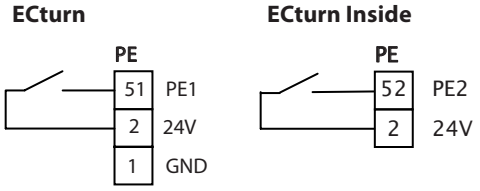

▶ Set the parameters:
  - Set *E1* or *E2* (configurable input) to *04* for the “mode of operation NA” function.

11.4 Stop

~~EN 16005~~

- The configurable PE input can be used as the stop input.
- When the stop switch is activated, the contact is closed (24 V applied to the PE input).
- The door stops immediately as soon as the switch is activated.
- As long as the switch is activated, the door remains in its position. The door leaf can be moved manually.

▶ Set the parameters:
- Set E1 or E2 (configurable input) to 05 for the "stop" function.

ECturn

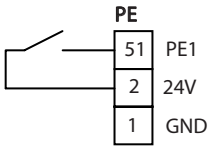

ECturn Inside

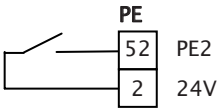

11.5 Bolt message

- The configurable PE input can be used as the input for the feedback contact of the electric strike.
- The bolt message input disables the activation of the drive if the door is locked. If the input becomes active while the door is open, the door reverses and remains open.
- The feedback contact can be a normally closed or normally open contact.
  - Normally closed contact: When the door is locked, the feedback contact is opened (0 V applied to the PE input).
  - Normally open contact: When the door is locked, the feedback contact is closed (24 V applied to the PE input).

▶ Set the parameters:
- Set E1 or E2 (configurable input) to 06 for "bolt message normally open contact".

ECturn

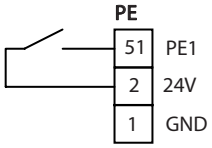

ECturn Inside

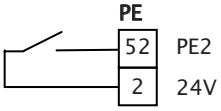

- Set E1 or E2 (configurable input) to 07 for "bolt message normally closed contact".

ECturn

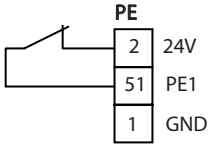

ECturn Inside

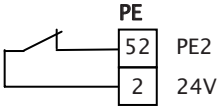

11.6 Contact sensor K

- The configurable PE input can be used as a second contact sensor input (same function as contact sensor K).
- Upon activation, the contact of the button is closed (24 V applied to the PE input).

▶ Set the parameters:
- Set E1 or E2 (configurable input) to 08 for the "contact sensor K" function.

ECturn

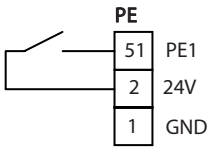

ECturn Inside

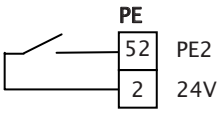

11.7 Mechanical programme switch (MPS)

See chapter 14.2, "Mechanical programme switch".

11.8 Contact sensor K/DO mode of operation

The function depends on the duration of the signal at the PE input.

- If the signal is active for less than 5 s, the function is the same as that of the contact sensor input K.
- If the signal in the mode of operation is active for longer than 5 s, the control unit changes to DO mode of operation. After the next short signal at the PE input, the control unit changes back to the AU mode of operation.

▶ Set the parameters:
- Set *E1* or *E2* (configurable input) to *11* for the "contact sensor K/DO mode of operation" function.

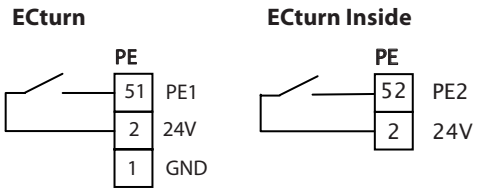

11.9 WC control

See chapter 13, "WC control".

12 Programmable output

- PA is a potential-free relay contact, switching voltage/current max. 24 V AC/DC, 0.5 A.
- The function of the configurable output PA can be selected via the service menu (see chapter 21, "Parameter menu").

12.1 Gong

▶ Set the parameters:
- Set *A1* (configurable output) to *01* for the "gong" function.

- The contact closes for 1 s in the AU or DO mode of operation as soon as contact sensor K or radio channel FK1 or SIS and K are activated

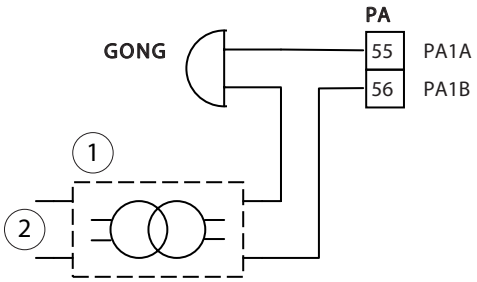

1 Gong transformer
2 Power supply circuit

12.2 Fault

▶ Set the parameters:
- Set *A1* (configurable output) to *02* for the "fault" function.

- The output contact closes as soon as the control unit detects a system fault. At the same time, the corresponding error number is indicated at the TPS, DPS and at the service LEDs.

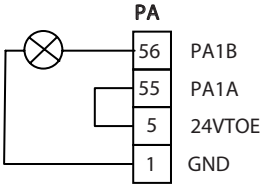

12.3 Electric strike and motor lock

- A fail-secure electric strike, a fail-safe electric strike or a motor lock can be connected as an electric strike. In addition, close pressure can be configured before opening in order to take the strain off the electric strike.

▶ Set the parameters:
- *to* (electric strike) to the required electric strike type with close pressure before opening if appropriate.
- *A1* (configurable output) to *03* for the "electric strike" function.

- Activation of the electric strike is limited to 8 s plus the parametrised opening delay *A1*.
- Connection of a lock feedback signal contact: see chapter 11.5, "Bolt message".

12.3.1 24 V DC electric strike supplied on drive side

▶ Attach free swing diode 1N4007 (mat. no. 115293) to the electric strike.

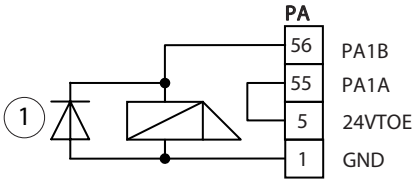

1 Free swing diode

12.3.2 AC electric strike supplied on site

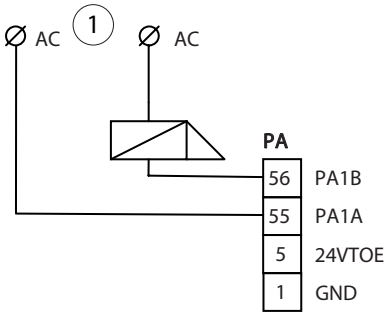

1 On-site AC power supply

12.4 Further functions

The set mode of operation or door mode can be signalled to a higher-level control unit or a building control centre, see chapter 21, “Parameter menu”, via the configurable output PA1.

▶ Set the parameters:
- Set *A1* (configurable output) to the required signal (*04* … *12*).

12.5 WC control

See chapter 13.

13 WC control

Accessories:
- GC 306 non-contact push button, mat. no. 163028
- GC 306 non-contact push button with hand pictogram, mat. no. 163029
- Plastic elbow switch, white, mat. no. 114078
- Plastic elbow switch, stainless steel, mat. no. 114077
- Stainless steel elbow switch, mat. no. 119898
- LS 990 stainless steel elbow switch, surface-mounted, mat. no. 128582
- LS 990 stainless steel elbow switch, flush-mounted, mat. no. 128583
- SLE220 indicator lamp, flush-mounted, AS500, AW, mat. no. 115934

For the emergency shut-off switch, see chapter 6.1, “Key switch”.

Only operates with fail-safe electric strike. For connection and parameter setting of the electric strike, see chapter 12.3, “Electric strike and motor lock”.

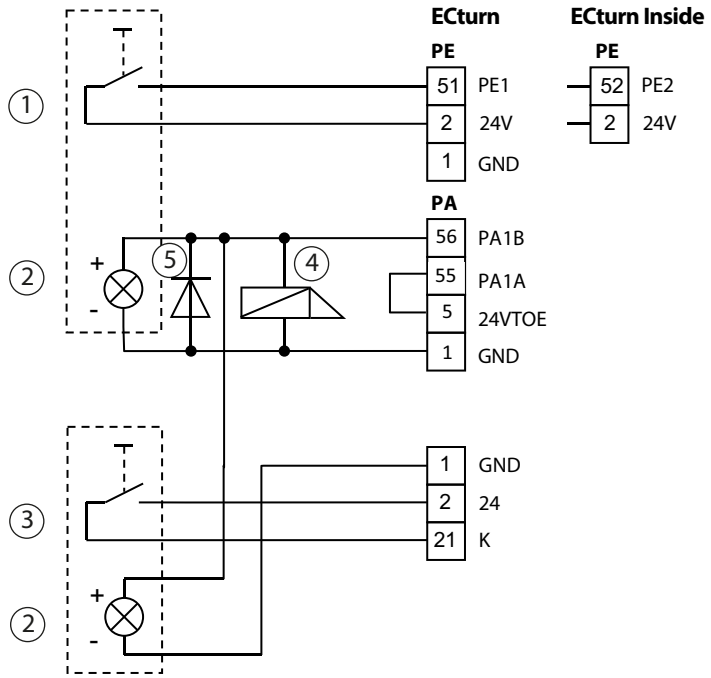

1 Inside push button (switching unit with illuminated display)
2 Illuminated OCCUPIED display
3 Outside push button (switching unit with illuminated display)
4 Electric strike
5 Free swing diode

The control unit recognises the operating function “WC control” on the basis of the parameter set for the configurable input (PE1 for ECturn, PE2 for ECturn Inside).
If the WC is not occupied, the door is in AU mode of operation and is in the closing position. The OCCUPIED signs are off.
When the “outside push button” is pressed, the WC door is opened. Once someone has entered the cubicle, the WC door is switched to NA mode of operation by pressing the “inside push button” and the “outside push button” is blocked. The OCCUPIED signs light up. The WC door is locked by the fail-safe electric strike.
After 30 minutes have passed, a signal is sounded to indicate that the WC has been occupied for a long time.
Pressing the “inside push button” again switches the mode of operation back to AU. The OCCUPIED signs go out. The door opens and the “outside push button” is activated again.
The function “WC control” is cancelled in the following cases:
- When the door is closed and locked and manual opening has been detected.
- When the door is opened from the outside using the mechanical contact (KB) or FK2 (e.g. in case of an emergency).

In both cases the door can then be activated via the “outside push button”.
In the event of a power failure, the fail-safe electric strike is released and the door can be opened manually.

▶ Set the parameters:
  - *E1* or *E2* (configurable input) to *21* (WC control) (*E1* for ECturn, *E2* for ECturn Inside).
  - Set *A1* to *13* (OCCUPIED display).

Do **not** set the parameter *AC* to *01* or *03*. Otherwise the door will open in the event of a power failure.

14 Mode of operation

The following options are available to switch to the mode of operation OFF, NA, AU or DO:
- Push button mode of operation (integrated in the end cap in the case of ECturn)
- Mechanical programme switch MPS (only with ECturn Inside)
- Keypad programme switch TPS
- Display programme switch DPS

14.1 Mode of operation button

The mode of operation button on the drive can be used to select the OFF, NA, AU or DO modes of operation.

▶ Press the mode of operation button briefly.

The mode of operation display immediately switches one mode of operation further. The drive itself does not change the mode of operation to the then new mode of operation until 1 s after the last button has been pressed. This makes it possible, for example, to change the mode of operation from AU via DO and OFF to NA. The mode of operation display changes its colour in accordance with the mode of operation selected:
off (OFF) → red (NA) → green (AU) → blue (DO) → off (OFF) → red (NA) → ...

14.2 Mechanical programme switch

- The MPS can only be used for the ECturn Inside.
- If the MPS is used, changing the mode of operation is only possible with the MPS.

- MPS, AS500, mat. no. 113226
- MPS-ST, with key, AS500, mat. no. 113227
- Accessories:
  - Surface-mounting cap, single, AS500, mat. no. 120503

▶ Heed the installation instructions for MPS.

- OFF, NA, AU, DO modes of operation

▶ Set the parameters:
- Set *E2* (configurable input) to *09* for "mechanical programme switch MPS".
- *A1* (configurable output) to *02* for "fault" if necessary

In the event of an error, the LED on the MPS will light up if parameter *A1* (configurable output) is set to *02*.

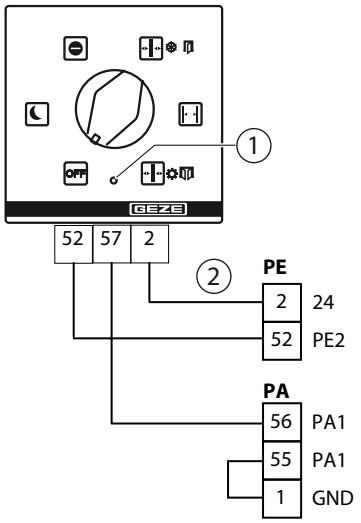

1 LED
2 Door transmission when installed in door leaf

14.3 Keypad programme switch

- TPS, AS500, flush-mounted, mat. no. 113231
- TPS SCT, AS500, flush-mounted, with key switch, without Euro profile half cylinder, mat. no. 113232
- Accessories:
  - Euro profile half cylinder, mat. no. 090176
  - Additional contact, mat. no. 024467
  - Surface-mounting cap, single, AS500, mat. no. 120503
  - Surface-mounting cap, double, AS500, mat. no. 128609

▶ Heed the installation instructions for TPS.

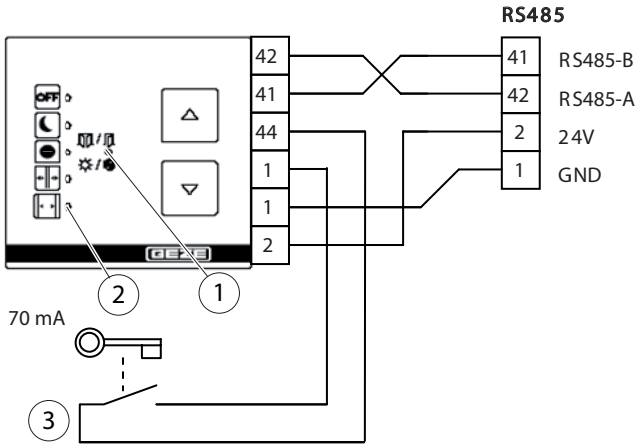

1 Display without function
2 LEDs for mode of operation display
3 Key switch for release of the mode of operation switchover with TPS

▶ Before connecting the TPS switch the drive operating voltage off.
Otherwise the TPS will not be detected by the control unit.

- The TPS cannot be used together with the MPS with ECturn Inside.
- OFF, NA, AU, DO modes of operation
- If there are one or more errors, these are displayed consecutively alternatively with the current mode of operation in encoded form with the five LEDs. At least two LEDs always light up when an error is displayed. The mode of operation is displayed for 5 s, the respective error message for 2 s.

Locking or releasing TPS operation by key switch
Operation of the TPS can be blocked/released by connecting a key switch to prevent the mode of operation being changed by unauthorised persons. Operation is possible using the key switch.

Permanent release of mode of operation switchover using the keypad programme switch:
▶ Rather than actuating the key switch at the keypad programme switch, connect a jumper between 1 and 44.

- If operation of the TPS is not possible since the block is active, the current mode of operation LED flashes once if a button is pressed.

14.4 Display programme switch

- DPS with OFF, AS500, flush-mounted, mat. no. 151524
- DPS with OFF SCT, AS500, UP, with key switch, without Euro profile half cylinder, mat. no. 155810

Accessories:

- Euro profile half cylinder, mat. no. 090176
- Additional contact, mat. no. 024467
  - Surface-mounting cap, single, AS500, mat. no. 120503
  - Surface-mounting cap, double, AS500, mat. no. 128609

▶ Heed the installation instructions for DPS.

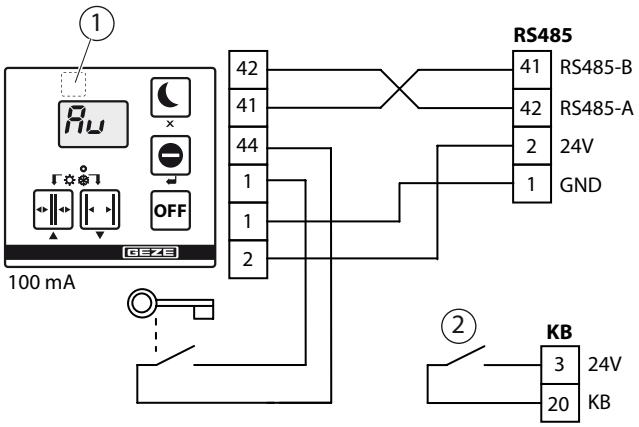

1 Hidden service button
2 Additional contact in the key switch for activation of KB

▶ Before connecting the DPS switch the drive operating voltage off.
Otherwise the DPS will not be detected by the control unit.

- The DPS cannot be used together with the MPS with ECturn Inside.
- Modes of operation: OFF, NA, AU, DO

Locking or releasing DPS operation by key switch
Operation of the DPS can be blocked/released by connecting a key switch to prevent the mode of operation being changed by unauthorised persons. Operation is possible using the key switch.

Permanent release of mode of operation switchover using the display programme switch:
▶ Rather than actuating the key switch at the display programme switch, connect a jumper between 1 and 44.

- If operation of the DPS is not possible since the block is active, 2 lines will flash in the display if a button is pressed.

15 Mains connection

Use an on-site automatic cut-out as the line-side disconnecting device, the dimensioning of which is matched to the type, cross-section, type of routing and ambient conditions of the on-site power supply circuit. The automatic cut-out must have at least 4 A and max. 16 A.

15.1 Mains connection ECturn

DANGER
Danger of electric shock!
▶ If the connection to the mains voltage is without a Schuko plug, it must be carried out by a qualified electrician.
▶ Perform the power connection and equipment earth conductor test in accordance with VDE 0100 Part 600.

15.1.1 Mains connection for transom installation

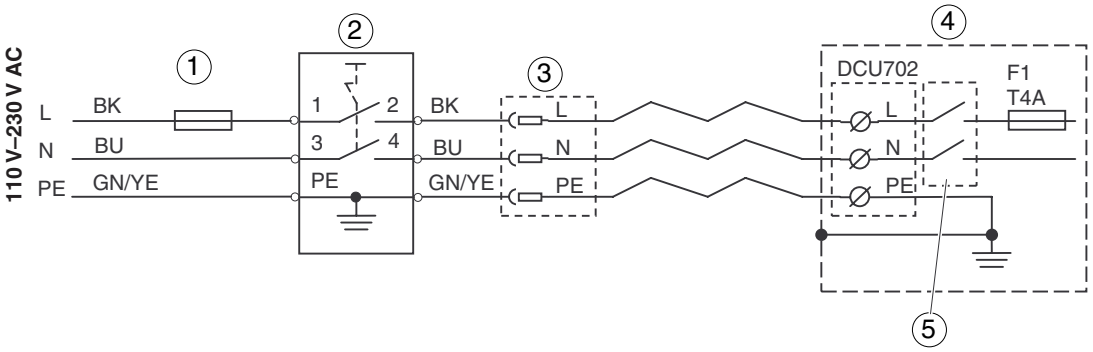

1 Mains fuse provided on site
2 Main switch provided on site (optional)
3 Earth-pin power socket (provided on site)
4 ECturn drive unit
5 Mains switch

15.1.2 Mains connection for door leaf installation

Door transmission cable ECturn, mat. no. 135307

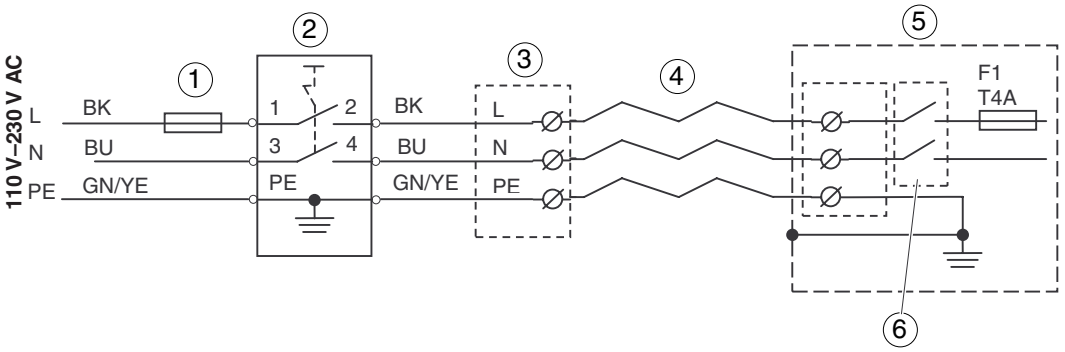

1 Mains fuse provided on site
2 Main switch provided on site (optional)
3 Connection box (provided on site)
4 ECturn door transmission cable
5 ECturn drive unit
6 Mains switch

15.2 Mains connection for ECturn Inside

DANGER
Danger of electric shock!
- ▶ Have connection of the power supply to the mains voltage carried out by a qualified electrician.
- ▶ Perform the power connection and equipment earth conductor test in accordance with VDE 0100 Part 600.

- ▫ Power supply NT 3.83A-24V HS, mat. no. 196761
- ▫ Surface-mounted power supply housing, mat. no. 152010
- ▫ Max. cable length power supply – door controller: 20 m
- ▫ Wire cross-section for the connection power supply – door controller: 1 mm^2.
- ▶ Mount the power supply in a distributor cabinet or in a surface-mounted power supply housing.
- ▶ Slide the ferrite sleeve over the cable power supply – door controller and position it direct at the DCU703 control unit.

15.2.1 Mains connection for installation in the frame

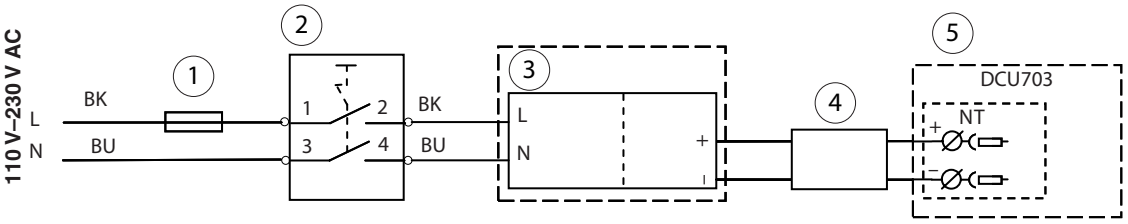

1 Mains fuse provided on site
2 Main switch (optional)
3 Power supply
4 Ferrite sleeve
5 ECturn Inside drive

15.2.2 Mains connection for installation in the leaf

Drip loop, mat. no. 106131

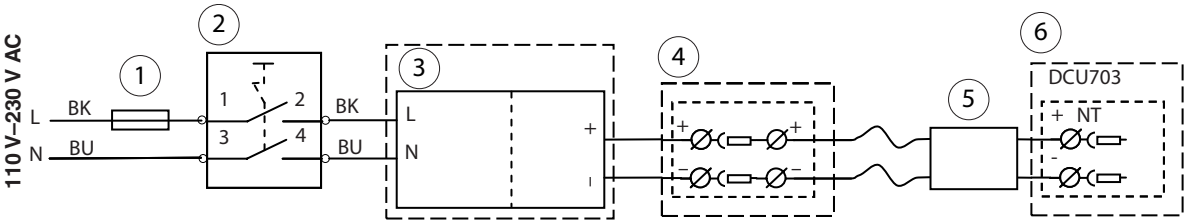

1 Mains fuse provided on site
2 Main switch (optional)
3 Power supply
4 Drip loop
5 Ferrite sleeve
6 ECturn Inside drive

16 Motor

- Motor gear unit for ECturn, mat. no. 131471
- Motor gear unit for ECturn Inside, mat. no. 149501

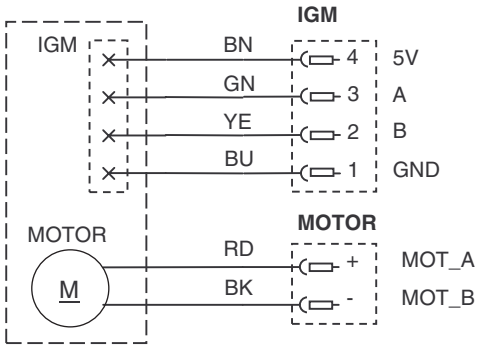

17 Rechargeable battery

- Rechargeable battery ECturn, mat. no. 131473
- Rechargeable battery ECturn Inside, mat. no. 149496

- The rechargeable battery is not in the drive when the unit is delivered.
- The rechargeable battery can be discharged in the delivery state. Therefore the drive has to be operated using the on-site power supply for at least 24 hours after connection of the rechargeable battery in order for the rechargeable battery to charge.

- Rechargeable battery voltage in charged state: ≥ 21.6 V (with rechargeable battery unplugged)
- The rechargeable battery has to be replaced every 2-3 years.

▶ Set parameter *AC* for the required behaviour of the drive in the event of an on-site mains voltage failure (see chapter 21, “Parameter menu”):

- After a supply voltage failure the drive still carries out the function set with parameter *AC*. Then the drive switches itself off by disconnecting the connection to the rechargeable battery.
  If the NA, AU or DO mode of operation is set, the drive can be activated via the KB input or one f the radio channels FK1 or FK2. With *AC* = *01* the drive opens and switches off in the open position. With *AC* = *02* the drive opens and closes and switches off in the closing position.

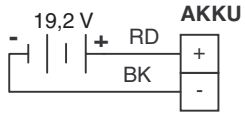

18 Control unit

BA-LED	Mode of operation display
WRB-5	Receiving module
STAT	WRB-5 status LED
LERN	WRB-5 teach button
LED 24V	Operating voltage display 24 V
LED1 to LED5	Service LEDs for displaying errors, parameters and parameter values
PROG	Programming connection
S1, S2	Service buttons for setting parameters for the control unit
S3	Mode of operation key

18.1 ECturn control unit

- ECturn control unit (DCU 702 connection board, DCU700 control unit and power supply), mat. no. 131472
- WRB-5 radio reception board, mat. no. 135170

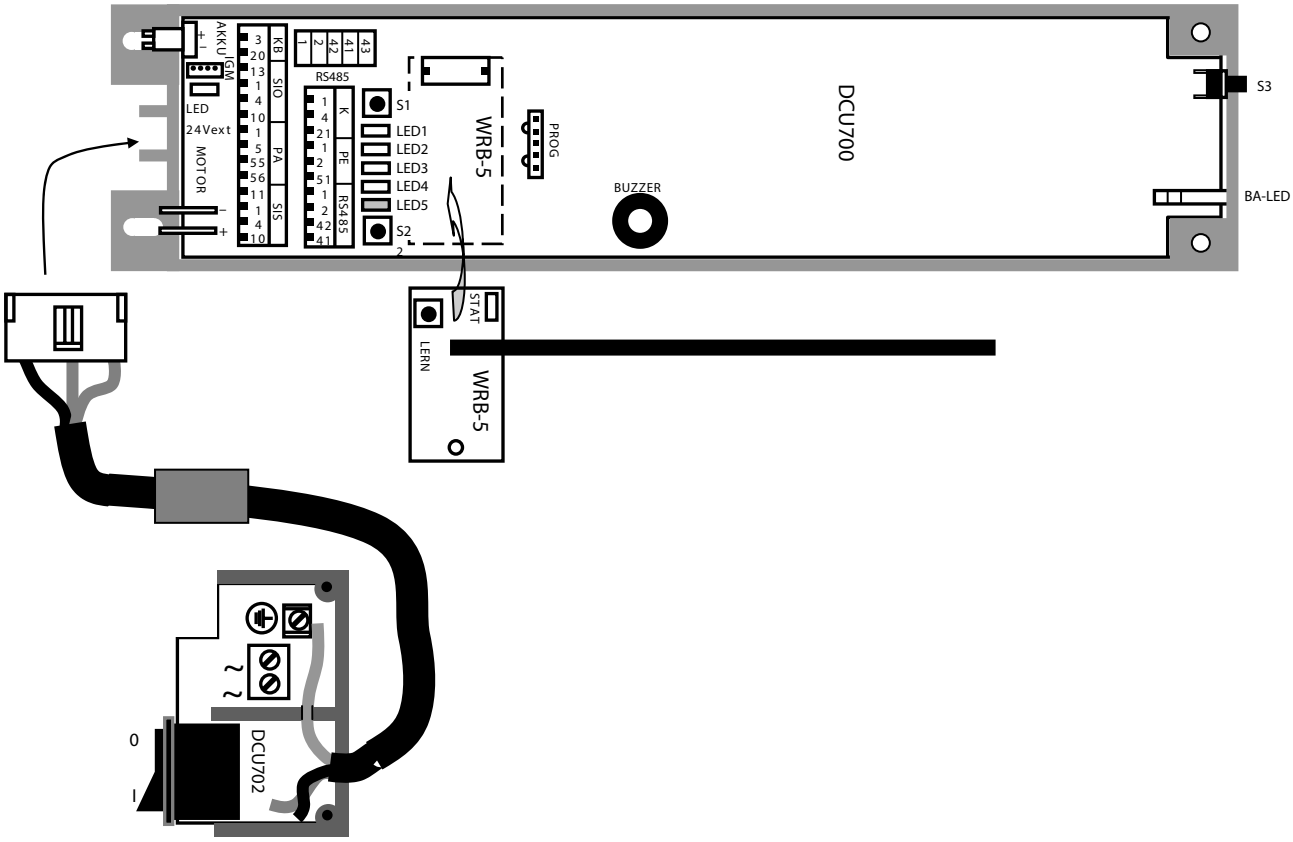

18.2 ECturn Inside control unit

- DCU703 control circuit board, mat. no. 144742
- DCU704 service module
- WRB-5 radio reception board, mat. no. 135170

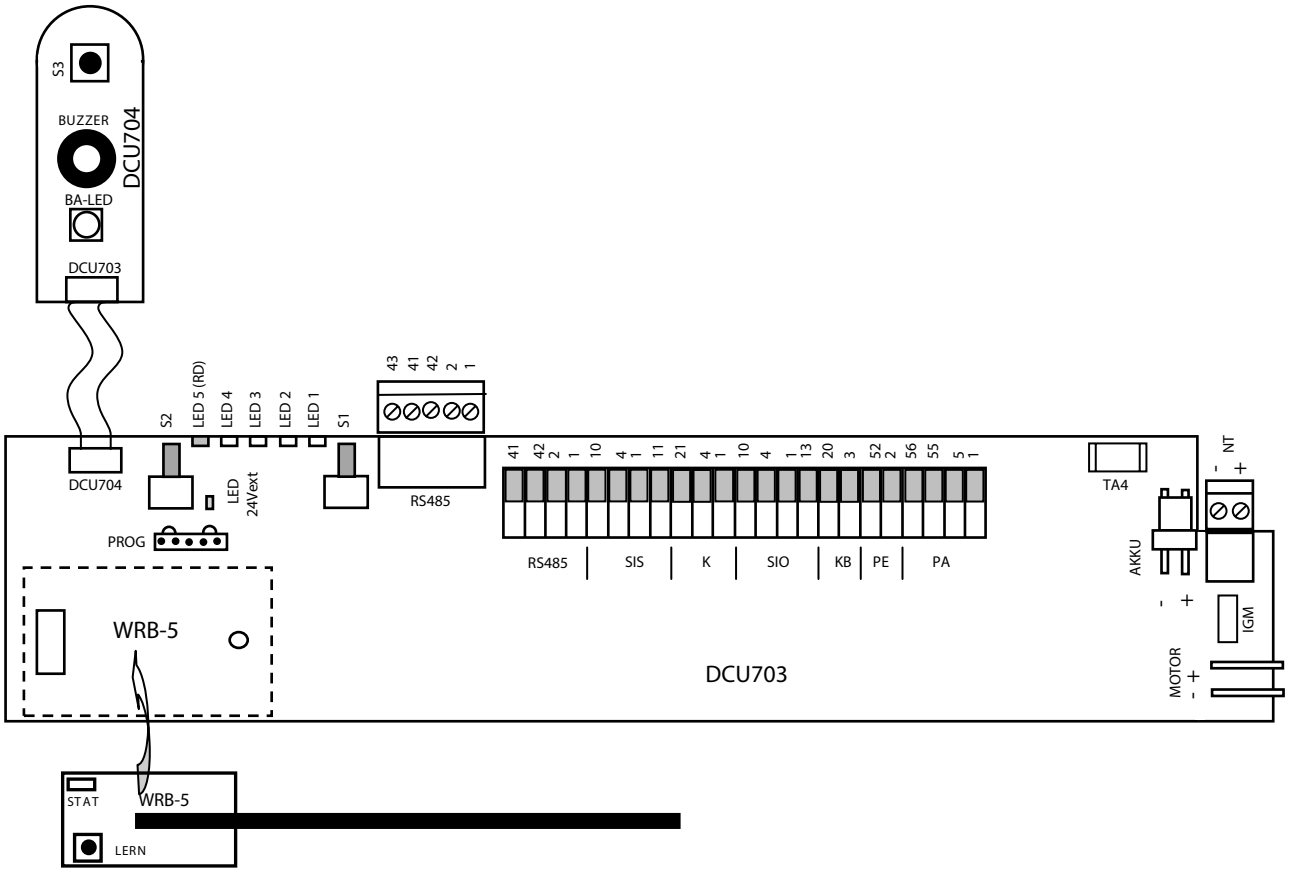

19 Low-energy mode and automatic mode

19.1 Low energy mode

Doors set to low-energy function generally do not require any additional protective devices, if no people in special need of protection are expected to use the door.

EN 16005

The drive can be operated as a low-energy drive if the following conditions are met:

- The static force on the main closing edge is smaller than 67 N.
- The kinetic energy in the door leaf is lower than 1.69 J.

If the drive does not fulfil these requirements, it is in automatic mode. The leaf movement has to be secured with protective devices. Safety sensors can be connected both for automatic mode and for low-energy mode. The control unit also reacts to connected safety sensors in low-energy mode if the control is configured correspondingly.
Low-energy mode or automatic mode is set using the parameter *At*. Factory setting is low-energy mode.

▶ Set parameter *At* (drive type) as follows:
- set to *01* for "1-leaf single-action door with guide rail, low-energy mode (factory setting)
  or
- to *02* for "1-leaf single-action door with link arm, low-energy mode" (ECturn only).

If parameters are set for low-energy mode,
- the setting options of the hold-open times is limited to greater than or equal to 5 s,
- the opening speed and the closing speed are set to 18°/s (door angle),
- the maximum opening torque and maximum closing torque is set to 40 Nm.

During commissioning the values for the speeds and for the torques can then be optimised individually in the case of light or narrow door leaves (see chapter 19.1.1).

19.1.1 Optimising speeds in low-energy mode

EN 16005

Higher speeds can be set for lighter and/or narrow door leaves. The diagram shows the maximum speeds allowed depending on the leaf width and leaf weight.

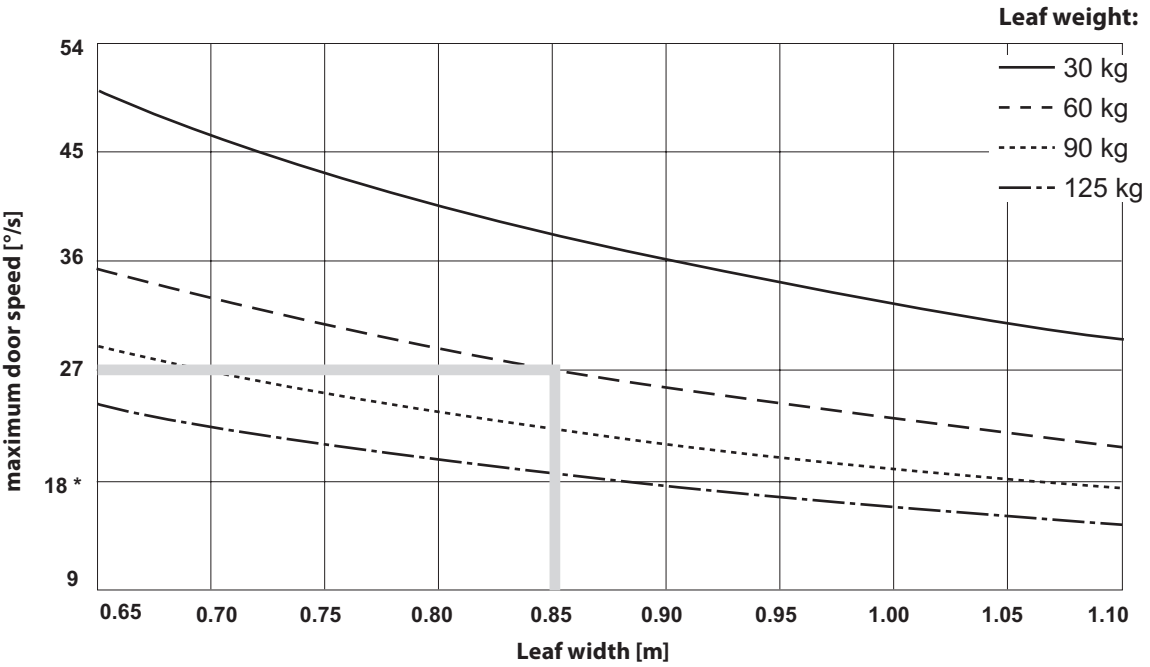

* 18°/s = factory setting

Example
For a door leaf with a weight of 60 kg and a leaf width of 0.85 m the value 27°/s may still just be set for the opening speed (*uO*) and the closing speed (*uC*) in order for the requirements placed on the kinetic energy by low-energy operation to be observed.

19.1.2 Setting opening and closing torque

EN 16005

- For installation with guide rail, the force on the main closing edge is smaller than 67 N independently of the leaf width.
- For installation with link arm (ECturn), set the maximum opening torque (*FO*) and the maximum closing torque (*FC*) depending on the leaf width as follows:
  - 0.65 m – 0.8 m: 30 Nm
  - 0.8 m – 0.95 m: 40 Nm
  - 0.95 m – 1.1 m: 50 Nm

19.2 Automatic mode

EN 16005

In automatic mode additional protective devices are usually necessary (depending on the safety analysis).

Set drive type

▶ Set parameter *At* (drive type) as follows:
- to *03* for "1-leaf single-action door with guide rail, automatic operation" or
- to *04* for "1-leaf single-action door with link arm, automatic mode" (ECturn only).

20 Commissioning and service

Commissioning and service can be effected either via the display programme switch or the buttons S1 and S2, see chapter 21, “Parameter menu”.

20.1 Display programme switch

The DPS can be used for commissioning and servicing (mat. no. 151524);

- for changing the drive parameters
- for teaching the drive
- for diagnosis

Modes of operation			Service mode	
	nA	Night mode	×	Cancel and return to first menu level
	LS	Without function	↵	Confirm
	Au	Automatic	▲	Scroll up Increase value
	do	Hold open	▼	Scroll down Reduce value
OFF	oF	OFF		
Service button (1) + ↵ simultaneously	Change mode of operation / service mode			

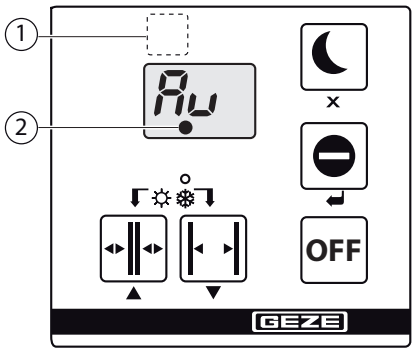

1 Service key
2 Position unknown

20.2 Service buttons S1 and S2

Function	Input and reaction
Open/leave the parameter menu	▶ Press buttons S1 and S2 simultaneously for longer than 2 s. LED5 flashes slowly, corresponding to the selected parameter level: Level 1: 1 pulse + 1 s break Level 2: 2 pulses + 1 s break LED1 through LED4 display the parameter.
Parameter selection	▶ Briefly press button S2 (+) or button S1 (–).
Switch to value setting	▶ Keep button S1 pressed longer than 2 s. In the value menu, LED5 is off and LED1 through LED4 display the value in accordance with the value table.
Change value	▶ Briefly press button S2 (+) or button S1 (-).
Confirm value	▶ Press button S1 for longer than 2 s.
Value setting without exiting value change	▶ Press button S2 for longer than 2 s.
Reset values to factory settings	▶ Set factory settings parameter to 01.

20.3 Pre-conditions for commissioning

- Installation is complete.
- Electrical installation is complete.
- Sensors are correctly configured and aligned.

20.4 Commissioning the drive

- ▶ If the safety sensor GC 338 is used to secure opening and closing, continue with chapter 20.5, "Commissioning the drive with GC 338".
- ▶ If necessary, insert DPS into the control unit.
- ▶ If necessary, connect the rechargeable battery to the control unit.
- ▶ Switch on the on-site power supply of the drive.
- ▫ Display
  - ▫ The mode of operation display on the drive lights up yellow (parameters to factory settings)
  - ▫ DPS: LE (learn)
- ▶ Set the parameters, in particular (if necessary or required):
  - ▫ to (electric strike) to the type of electric strike used
  - ▫ E1/E2 (configurable input) to the required function
  - ▫ A1 (configurable output) to the required function
  - ▫ S1 (safety closing) to 01 for "SIS" or 02 for "SIS and K"
  - ▫ S3 (safety opening) to 01 "SIO"
  - ▫ tE (testing) depending on sensor type
  - ▫ AC (power failure) to the required function
  - ▫ At (drive type) to the version of the drive
- ▶ Start learning.
- ▫ With S1, S2: Request service menu by pressing buttons S1 and S2 at the same time.
  - ▫ Actuate S1 briefly to get to parameter LE (learning).
  - ▫ Press S1 for 2 s to start the learning mode.
- ▫ With DPS: select LE for learning.
  - ▫ Press the ↵ key.
  - ▫ Display DPS: L1
- ▫ A confirmation signal will sound. Display service LEDs: 5○ 4○ 3○ 2○ 1●

EN 16005

With ECturn Inside:
- ▶ Remove DPS.

- ▶ Move the door leaf by hand to the desired open position.

- ▶ Do not enter into the detection area of the safety sensor 'open', because otherwise the blanking of any wall present in the open position is taught incorrectly.

- ▶ Move the door leaf by hand completely to the closing position.

With ECturn Inside:
- ▶ Move the door leaf as far out of the closing position as necessary to make buttons S1 and S2 or the DPS connection easily accessible again.

- ▶ End learning.
  - ▫ With S1, S2: Press button S1 for 2 s.
  - ▫ With DPS:

With ECturn Inside:
- ▶ Plug DPS in.

- ▶ Press the ↵ key.

A confirmation signal will sound. The opening angle of the door is now known to the control unit.
The mode of operation LED is off.

With ECturn Inside:
- ▶ Before leaving the service menu, block the door leaf mechanically if parameter OF (retaining action opening) or CF (retaining action closing) are not set to 00 (factory setting).

Otherwise the door leaf can move in closing or opening direction and damage the control unit.

- ▶ Exit the service menu.
  - ▫ With S1, S2: Simultaneously press buttons S1 and S2 longer than 2 s.
  - ▫ With DPS: Press the hidden service button and button ↵ at the same time.

After learning, the AU mode of operation is set, the mode of operation LED lights up green, interrupted by 2 flash pulses (1 Hz).
- ▫ With DPS: Remove DPS.
- ▶ Close door leaf completely.

▶ Actuate drive (K, KB or radio remote control).

The door opens slowly to the open position. Afterwards the door then closes again with slower speed.
Flashing of the mode of operation LED stops as soon as the drive was able to move through the taught opening angle range.

▶ Terminating commissioning:
  - Check function and detection areas of all contact sensors.
  - Check function and detection areas of the safety sensors for monitoring opening and closing. Check sensor strips of each individual sensor module.

20.5 Commissioning the drive with GC 338

▶ If necessary, insert DPS into the control unit.
▶ If necessary, connect the rechargeable battery to the control unit.
▶ Switch on the on-site power supply of the drive.
- Display:
  - The mode of operation display on the drive lights up yellow (parameters to factory settings).
  - DPS: LE (learn)

▶ Set the parameters, in particular (if necessary or required):
  - to (electric strike) to the type of electric strike used
  - E1/E2 (configurable input) t the required function
  - A1 (configurable output) to the required function
  - AC (power failure) to the required function
  - At (drive type) to the version of the drive

▶ Deactivate safety sensors by parameter adjustment on the control unit:
  - S1 (safety closing) to 00, for “no SIS” (factory setting)
  - S3 (safety opening) to 00, for “no SIO” (factory setting)
  - tE (testing) to 00, for “no testing” (factory setting)

▶ Start learning:
- With S1, S2: Request service menu by pressing buttons S1 and S2 at the same time.
  - Actuate S1 briefly to get to parameter LE (learning).
  - Press S1 for 2 s to start the learning mode.
- With DPS: select LE for learning.
  - Press the ↵ key.
  - Display DPS: L1
- A confirmation signal will sound. Display service LEDs: 5○ 4○ 3○ 2○ 1●

With ECturn Inside:
▶ Remove DPS.

▶ Move the door leaf by hand to the desired open position.
▶ Move the door leaf by hand completely to the closing position.

With ECturn Inside:
▶ Move the door leaf as far out of the closing position as necessary to make buttons S1 and S2 or the DPS connection easily accessible again.

▶ End learning.
  - With S1, S2: Press button S1 for 2 s.
  - With DPS:

With ECturn Inside:
▶ Plug DPS in.

▶ Press the ↵ key.

A confirmation signal will sound. The opening angle of the door is now known to the control unit.
The mode of operation LED is off.

With ECturn Inside:
▶ Before leaving the service menu, block the door leaf mechanically if parameter OF (retaining action) or CF (retaining action closing) are not set to 00 (factory setting).

Otherwise the door leaf can move in closing or opening direction and the control unit can become damaged.

- ▶ Exit the service menu:
  - ▫ With S1, S2: Simultaneously press buttons S1 and S2 longer than 2 s.
  - ▫ With DPS: Press the hidden service button and button ↵ at the same time.

After learning, the AU mode of operation is set, the mode of operation LED lights up green, interrupted by 2 flash pulses (1 Hz).

- ▫ With DPS: Unplug DPS
- ▶ Close door leaf completely.
- ▶ Actuate drive (K, KB or radio remote control).

The door opens slowly to the open position. Afterwards the door then closes again with slower speed.
Flashing of the mode of operation LED stops as soon as the drive was able to move through the taught opening angle range.

- ▶ Teach the GC338 sensor strips.
- ▶ Following successful teaching of the sensor strips, activate the safety sensors by parameter setting on the control unit:

EN 16005

  - ▫ S1 (safety closing) to 01 for “SIS” or 02 for “SIS and K”
  - ▫ S3 (safety opening) to 01 for “SIO”
  - ▫ tE (testing) to 01, for “testing with 24V”
- ▶ Terminating commissioning:
- ▫ Check function and detection areas of all contact sensors.
- ▫ Check function and detection areas of the safety sensors for monitoring opening and closing. Check sensor strips of each individual sensor module.

21 Parameter menu

DPS	Service LEDs					Parameter	Encoding	Explanation
	5	4	3	2	1			
uO	*	○	○	○	●	Opening speed	9, **18**, ..., 90	°/s
uC	*	○	○	●	○	Closing speed	9, **18**, ..., 90	°/s
SC	*	○	○	●	●	Latching action closing position	**00** 09 ... 45	**no latching action** °/s Speed at which the drive moves to the closing position shortly before closing.
oH	*	○	●	○	○	Hold-open time	00 ... **05** ... 10, 12 … 20, 25, 30	s
oS	*	○	●	○	●	Hold-open time KB	00 ... **05** ... 10, 12 … 20, 25, 30	s
to	*	○	●	●	○	Electric strike	00 **01** 02 03 04 05 06	no electric strike **Fail-secure electric strike** Fail-safe electric strike Motor lock Fail-secure electric strike with close pressure before opening Fail-safe electric strike with close pressure before opening Motor lock with close pressure before opening
A1	*	○	●	●	●	Opening delay	**00** ... 90	× 0.1 s for K and KB
Pu	*	●	○	○	○	Push And Go	**00** 01 ...18 20	**no Push And Go** Push And Go, activating angle 1°-18°, 20°
Pc	*	●	○	○	●	Push To Close	**00** 01 02 03	**no Push To Close** Push To Close in AU, NA Push To Close in DO, drive changes to AU. Push To Close in AU, NA, DO. With Push To Close in DO, the drive changes to AU.
E1 E2	*	●	○	●	○	ECturn: configurable input 1 ECturn Inside: configurable input 2	**00** 01 02 03 04 05 06 07 08 09 11 21	**no function** Sabotage Switch function Switch function close after hold-open time NA mode of operation Stop Bolt message normally open contact Bolt message normally closed contact Contact sensor K Mechanical programme switch MPS (ECturn Inside only) Contact sensor K / DO mode of operation WC control
A1	*	●	○	●	●	programmable output 1	**00** 01 02 03 04 05 06 07 08 09	**no function** Gong (with contact sensor K activated) Fault Electric strike closed and locked closed opened OFF NA AU

DPS	Service LEDs 5	4	3	2	1	Parameter	Encoding	Explanation
							10	DO
							12	AU or DO
							13	WC control
b1	*	●	●	○	○	Gong signal	**00** 01 02	**off** Gong signal when the contact quiet sensor K is activated loud
b2	*	●	●	○	●	Movement signal	**00** 01 02	**off** Alarm signal during the open- Quiet ing and closing movement loud
S1	*	●	●	●	○	Security close	**00** 01 02	**no SIS** SIS Safety function SIS and K Safety function SIS and activation function K
S3	*	●	●	●	●	Security open	**00** 01	**no SIO** SIO Safety function
tE	**	○	○	○	●	Testing	**00** 01 02	**no testing** Testing with 24 V Testing with GND
AC	**	○	○	●	○	Power failure in AU or DO	**00** 01 02 03	**no function** open and switch off close and switch off Rechargeable battery operation 15 min
b0	**	○	○	●	●	Accelerate opening	05 ... **20** ... 90	
bC	**	○	●	○	○	Acceleration closing	05 ... **20** ... 90	
F0	**	○	●	○	●	max. torque opening	01 ... **04** ... 09	× 10 Nm
FC	**	○	●	●	○	max. torque closing	01 ... **04** ... 09	× 10 Nm
0F	**	○	●	●	●	Retaining action opening	**00** ... 11	Nm
CF	**	●	○	○	○	Retaining action closing	**00** ... 11	Nm
FS	**	●	○	○	●	Closing position torque	**00** 10 … 40	**No closing position torque** Torque acts after the end of the latching action in the closed position. Manual opening is more difficult while the torque is effective. The higher the set torque, the longer this lasts. Examples: ▫ at 10 Nm = 0.5 s, ▫ at 40 Nm = 2 s.
At	**	●	○	●	○	Drive type	**01** 02 03 04	**1-leaf single-action door with guide rail, low-energy mode** 1-leaf single-action door with link arm, low-energy mode (ECturn only) 1-leaf single-action door with guide rail, automatic mode 1-leaf single-action door with link arm, automatic mode (ECturn only)
CP	**	●	○	●	●	Factory setting	**00** 01	**Parameters are not reset** Parameters are reset
EP	**	●	●	○	○	Software version	01 05 00	e.g. for V1.5
SA	**	●	●	○	●	Service display	Co xx xx xx Ho xx xx xx	When paging using the arrow keys the values with the following meaning are displayed: Co Number of cycles Co 00 34 00 means 3400 cycles Ho Operating hours Ho 00 12 00 means 1200 hours
Er	**	●	●	●	○	Currently queued errors	CE	Clear error memory

DPS	Service LEDs					Parameter	Encoding	Explanation
	5	4	3	2	1			
oE	**	●	●	●	●	Error list	see error list	Query of the last 10 errors
Pt	***	○	○	●	●	Start production test		Start production test (no setting possibility)
LE	***	○	○	●	○	Starting/terminating teaching	L1	
	○	○	○	○	●			Drive is learning

○ LED off
● LED on
* LED5 flashes with 1 Hz
** LED5 flashes twice with 1 Hz
*** LED5 flashes three times with 1 Hz
bold Factory setting

21.1 Value table for service LEDs and display programme switch

DPS	Service LEDs				
	5	4	3	2	1
0	○	○	○	○	○
1	○	○	○	○	●
2	○	○	○	●	○
3	○	○	○	●	●
4	○	○	●	○	○
5	○	○	●	○	●
6	○	○	●	●	○
7	○	○	●	●	●
8	○	●	○	○	○
9	○	●	○	○	●
10	○	●	○	●	○
12	○	●	○	●	●
14	○	●	●	○	○
16	○	●	●	○	●
18	○	●	●	●	○
20	○	●	●	●	●
25	●	○	○	○	○
30	●	○	○	○	●
35	●	○	○	●	○
40	●	○	○	●	●
45	●	○	●	○	○
50	●	○	●	○	●
55	●	○	●	●	○
60	●	○	●	●	●
65	●	●	○	○	○
70	●	●	○	○	●
75	●	●	○	●	○
80	●	●	○	●	●
85	●	●	●	○	○
90	●	●	●	○	●

22 Error messages

DPS	TPS					Service LEDs					Error group	Cause	Behaviour of the drive
	OFF					5	4	3	2	1			
–	○	○	○	○	○	○	○	○	○	○	Operating voltage	Drive is switched off.	
	○	○	○	○	○	x	x	x	x	x	24V	Short-circuit of the 24 V	Drive remains in operation. The 24V LED on the control unit is off. Activation is not possible. TPS is off.
03	●	●	○	○	○	*	○	○	○	●	Failure supply voltage	Failure of the on-site supply voltage	If there is no rechargeable battery available: Leaf is braked by motor short-circuit. If there is a rechargeable battery available: Behaviour depends on the setting of the parameter AC (power failure). The position is unknown after the power has returned.
10	○	○	●	●	●	*	●	○	●	○	Motor rotary encoder	No pulse from the rotary encoder despite motor current. One of the two signals from the incremental rotary encoder is missing. The direction of rotation does not correspond to the set direction of rotation of the motor.	Door leaf is braked by the motor and the drive test is carried out. Retests after every change in mode of operation or after every activation. If the rotary encoder is OK again, the error is deleted.
11	○	○	●	●	●	*	●	○	●	○	Motor short-circuit	Motor short-circuit.	Door leaf is braked by the motor. Motor relay is opened. Retests after every change in mode of operation or after every activation. If the motor is OK again, the error is deleted and motor relay is closed again.
12	○	○	●	●	●	*	●	○	●	○	Motor	No motor current is measured although current is supplied to the motor	Door leaf is braked by the motor. Motor relay is opened. Retests after every change in mode of operation or after every activation.
13	○	○	●	●	○	*	○	○	●	●	Safety sensor close	Testing safety sensor close is faulty	Retests 3 times in the open position. Door closes with reduced speed. Retests 10 times in the closing position. Retests after every change in mode of operation or after every activation. As long as the error is active, the door is only accessible manually.
												Activation longer than 4 min	Door closes slowly. As soon as the signal is inactive again, the error is deleted.
15											Display programme switch	Monitoring only if DPS was connected to the control unit when the operating voltage was switched on.	Drive remains in operation. The error is deleted as soon as the DPS responds again.
17	●	●	●	○	○	*	●	○	○	●	Electric strike, motor lock	An obstruction is recognised in the closing position during an attempt to open.	The door remains closed after a further attempt to open. Waiting for the next activation.
28	●	●	○	○	●	*	○	●	●	●	Control unit motor relay	Testing the motor relay has failed. Internal error	OFF mode of operation Position unknown

DPS	TPS					Service LEDs					Error group	Cause	Behaviour of the drive
	OFF					5	4	3	2	1			
32	●	○	○	○	●	*	●	●	●	●	Sabotage	Sabotage active	The activation to KB is suppressed. The error is deleted as soon as the mode of operation is changed and the Sabotage input is inactive.
34	x	x	x	x	x	*	○	●	●	○	Keypad programme switch	Monitoring only if TPS was connected to the control unit when the operating voltage was switched on.	Drive remains in operation. The error is deleted as soon as the TPS responds again.
41	●	○	●	○	○	*	○	●	○	○	Safety sensor open	Testing safety sensor open is faulty	Door closes with normal speed. Retests 10 times in the closing position. Retests after every change in mode of operation or after every activation. As long as the error is active, the door is only accessible manually.
												Activation longer than 4 min	Door closes with normal speed. As long as the sensor is active, the door opens slowly. As soon as the signal is inactive again, the error is deleted.
45	○	○	○	●	●	*	●	○	●	●	Control unit temperature	Control unit overheated	From 85 °C the hold-open time is extended.
47	●	●	○	○	●	*	○	●	●	●	Control unit temperature sensor	Internal error. Thermal sensor on the control unit defective	Drive remains in operation.
48	○	○	○	●	●	*	●	○	●	●	Motor temperature	Motor temperature too high	Motor relay is open.
60	●	●	○	○	●	*	○	●	●	●	Control unit	Internal error	Door leaf is braked by the motor. Motor relay is opened. The generator brake is active as long the mains voltage is applied.
61	○	●	●	○	○	*	●	●	○	○	Rechargeable battery	Rechargeable battery discharged. Rechargeable battery voltage <17 V	If mains voltage is available, the drive remains in operation. If there is no mains voltage available (rechargeable battery operation), the drive switches off.
X.X	○	○	●	○	●	-	-	-	-	-	Position is unknown	After supply voltage is returned	Initialisation with reduced speed. Mode of operation LED flashes yellow

only with ECturn Inside:

14	x	x	x	x	x	*	●	●	●	○	Programme switch	Broken MPS cable	Last operating status is retained.

○ LED off
● LED on
* LED5 flashes with 10 Hz
- no display
x Display undefined

Germany
GEZE GmbH
Niederlassung Süd-West
Tel. +49 (0) 7152 203 594
E-Mail: leonberg.de@geze.com

GEZE GmbH
Niederlassung Süd-Ost
Tel. +49 (0) 7152 203 6440
E-Mail: muenchen.de@geze.com

GEZE GmbH
Niederlassung Ost
Tel. +49 (0) 7152 203 6840
E-Mail: berlin.de@geze.com

GEZE GmbH
Niederlassung Mitte/Luxemburg
Tel. +49 (0) 7152 203 6888
E-Mail: frankfurt.de@geze.com

GEZE GmbH
Niederlassung West
Tel. +49 (0) 7152 203 6770
E-Mail: duesseldorf.de@geze.com

GEZE GmbH
Niederlassung Nord
Tel. +49 (0) 7152 203 6600
E-Mail: hamburg.de@geze.com

GEZE Service GmbH
Tel. +49 (0) 1802 923392
E-Mail: service-info.de@geze.com

Austria
GEZE Austria
E-Mail: austria.at@geze.com
www.geze.at

Baltic States –
Lithuania / Latvia / Estonia
E-Mail: baltic-states@geze.com

Benelux
GEZE Benelux B.V.
E-Mail: benelux.nl@geze.com
www.geze.be
www.geze.nl

Bulgaria
GEZE Bulgaria - Trade
E-Mail: office-bulgaria@geze.com
www.geze.bg

China
GEZE Industries (Tianjin) Co., Ltd.
E-Mail: chinasales@geze.com.cn
www.geze.com.cn

GEZE Industries (Tianjin) Co., Ltd.
Branch Office Shanghai
E-Mail: chinasales@geze.com.cn
www.geze.com.cn

GEZE Industries (Tianjin) Co., Ltd.
Branch Office Guangzhou
E-Mail: chinasales@geze.com.cn
www.geze.com.cn

GEZE Industries (Tianjin) Co., Ltd.
Branch Office Beijing
E-Mail: chinasales@geze.com.cn
www.geze.com.cn

France
GEZE France S.A.R.L.
E-Mail: france.fr@geze.com
www.geze.fr

Hungary
GEZE Hungary Kft.
E-Mail: office-hungary@geze.com
www.geze.hu

Iberia
GEZE Iberia S.R.L.
E-Mail: info.es@geze.com
www.geze.es

India
GEZE India Private Ltd.
E-Mail: office-india@geze.com
www.geze.in

Italy
GEZE Italia S.r.l. Unipersonale
E-Mail: italia.it@geze.com
www.geze.it

GEZE Engineering Roma S.r.l
E-Mail: italia.it@geze.com
www.geze.it

Korea
GEZE Korea Ltd.
E-Mail: info.kr@geze.com
www.geze.com

Poland
GEZE Polska Sp.z o.o.
E-Mail: geze.pl@geze.com
www.geze.pl

Romania
GEZE Romania S.R.L.
E-Mail: office-romania@geze.com
www.geze.ro

Russia
OOO GEZE RUS
E-Mail: office-russia@geze.com
www.geze.ru

Scandinavia – Sweden
GEZE Scandinavia AB
E-Mail: sverige.se@geze.com
www.geze.se

Scandinavia – Norway
GEZE Scandinavia AB avd. Norge
E-Mail: norge.se@geze.com
www.geze.no

Scandinavia – Denmark
GEZE Danmark
E-Mail: danmark.se@geze.com
www.geze.dk

Singapore
GEZE (Asia Pacific) Pte, Ltd.
E-Mail: gezesea@geze.com.sg
www.geze.com

South Africa
GEZE South Africa (Pty) Ltd.
E-Mail: info@gezesa.co.za
www.geze.co.za

Switzerland
GEZE Schweiz AG
E-Mail: schweiz.ch@geze.com
www.geze.ch

Turkey
GEZE Kapı ve Pencere Sistemleri
E-Mail: office-turkey@geze.com
www.geze.com

Ukraine
LLC GEZE Ukraine
E-Mail: office-ukraine@geze.com
www.geze.ua

United Arab Emirates/GCC
GEZE Middle East
E-Mail: gezeme@geze.com
www.geze.ae

United Kingdom
GEZE UK Ltd.
E-Mail: info.uk@geze.com
www.geze.com

GEZE GmbH
Reinhold-Vöster-Straße 21–29
71229 Leonberg
Germany

Tel.: 0049 7152 203 0
Fax.: 0049 7152 203 310
www.geze.com

Der Maßstab DIN ISO 9001 unseres Handelns

GEZE